# Table of Contents


| | |
|---|---|
| Letter of Transmittal | 4 |
| HVAC Controls Reviewed - Yates Co Responses D.S. 08142023 | 5 |
| 0.0 Cover Page | 9 |
| 0.1 General 1 | 10 |
| 0.2 General 2 | 11 |
| 0.3 General 3 | 12 |
| 0.4 General 4 | 13 |
| 1.0.1 Summary Bill of Materials | 14 |
| 1.1.1 Valve Schedule pg.1 | 15 |
| 1.1.2 Valve Schedule pg.2 | 16 |
| 1.2.1 Damper Schedule | 17 |
| 1.3.1 AFMS Schedule | 18 |
| 1.4.1 Network Schedules Pg.1 | 19 |
| 1.4.2 Network Schedules Pg.2 | 20 |
| 1.4.3 Network Schedules Pg.3 | 21 |
| 1.5.1 Network 1st Floor Area A | 22 |
| 1.5.2 Network 1st Floor Area B | 23 |
| 1.5.3 Network 1st Floor Area C | 24 |
| 1.5.4 Network 1st Floor Area D&E | 25 |
| 1.5.5 Network 2nd Floor Area C | 26 |
| 1.5.6 Network 2nd Floor Area D&E | 27 |
| 1.6.1 Network Router 1 | 28 |
| 1.6.2 Network Router 2 | 29 |
| 2.1.1 Chilled Water System | 30 |
| 2.1.2 Misc Controls | 31 |
| 2.1.3 CHWS Panel Details | 32 |
| 2.1.4 CHWS Sequence | 33 |
| 2.2.1 Hot Water System | 34 |
| 2.2.2 Hot Water System Panel | 35 |
| 2.2.3 Hot Water System Sequence | 36 |
| 2.3.1 Domestic HW Generator | 37 |
| 2.3.2 Domestic HW Generator Panel | 38 |
| 2.3.3 DHW Generator Sequence | 39 |
| 2.4.1 Local Water Heater | 40 |
| 2.4.2 Local Water Heater Panel | 41 |
| 3.0.1 AHU Schedule | 42 |
| 3.1.1 VAV AHU (T4) | 43 |
| 3.1.2 VAV AHU (T4) Panel | 44 |
| 3.1.3 VAV AHU (T4) x2 Relief | 45 |
| 3.1.4 VAV AHU (T4) x2 Relief Panel | 46 |
| 3.1.5 VAV AHU (T4) x2 Rel Mod | 47 |
| 3.1.6 VAV AHU (T4) Sequence | 48 |
| 3.2.1 VAV AHU (T2) | 49 |

| | |
|---|---|
| 3.2.2 VAV AHU (T2) Panel | 50 |
| 3.2.3 VAV AHU (T2) Sequence | 51 |
| 3.3.1 SZ AHU (T3) | 52 |
| 3.3.2 SZ AHU (T3) Panel Details | 53 |
| 3.3.3 SZ AHU (T3) Relief | 54 |
| 3.3.4 SZ AHU (T3) Sequence | 55 |
| 3.4.1 SZ AHU (T1) | 56 |
| 3.4.2 SZ AHU (T1) Panel Details | 57 |
| 3.4.3 SZ AHU (T1) Relief | 58 |
| 3.4.4 SZ AHU (T1) Sequence | 59 |
| 3.4.5 SZ AHU (T5) | 60 |
| 3.4.6 SZ AHU (T5) Panel Details | 61 |
| 3.4.7 SZ AHU (T5) Relief | 62 |
| 3.4.8 SZ AHU (T5) Sequence | 63 |
| 3.5 CHWS & HWS Pressure | 64 |
| 3.6.1 MDFIDF RTU (T7) | 65 |
| 3.6.2 DX RTU with Elec Heat (T8) | 66 |
| 3.6.3 DX RTU with Elec HT Sequenc | 67 |
| 5.0.1 Terminal Unit Schedule pg.1 | 68 |
| 5.0.2 Terminal Unit Schedule pg.2 | 69 |
| 5.1 FPVAV (T9-1) | 70 |
| 5.2 FPVAV (T9-2) | 71 |
| 5.3 FPVAV (T9-3) | 72 |
| 5.4 VAV (T12) | 73 |
| 7.1 MAU-1 Kitchen | 74 |
| 7.2 MAU-1 Sequence | 75 |
| 8.0.1 Exhaust Fan Schedule | 76 |
| 8.1 E-3 & E-5 (T13) | 77 |
| 8.2 E-6,7,8,9C (T13) | 78 |
| 8.3 E-9A & 9B (T11,21) | 79 |
| 8.4 E-9A & E-9B Sequence | 80 |
| 8.5 E-10A,10B,12A,12B (T13) | 81 |
| 8.6 E-11,13A,13B,14 (T13) | 82 |
| 8.7 E-1B,1C,1D (T13,16,30) | 83 |
| 8.8 E-15,17 (T10,15) | 84 |
| 8.9 E-18 (T15) | 85 |
| 8.10 Boiler Rm HVAC (T17) | 86 |
| 8.11 FreezerCooler (T31) | 87 |
| 8.12 Fire Riser Unit Heater (T22) | 88 |
| 8.13 Exterior Lighting (T25) | 89 |
| 8.14 Sump Pump Alarm Panel (T26) | 90 |
| 9.1.1 Override Graphics | 91 |
| 9.1.2 Override Graphics(Alternate) | 92 |
| 9.1.3 Override Panels | 93 |
| 9.1.4 Graphics Package | 94 |

YATES Company, LLC

"Your Automation Technologies Energy Solutions Company"

| Letter of Transmittal | |
|---|---|
| **Receiving Contractor Information** | |
| **To:** | Zachary Zook |
| **Company:** | Victoria Air Conditioning |
| **Phone #:** | 361-576-0811 |
| **Submitting Contractor Information** | |
| **From:** | Yates Company, LLC |
| **Project #:** | SA230015C |
| **Project Name:** | **NISD Chumbley ES Rev3** |
| **Spec Section:** | **23 90 00** Building Automation System - Direct Digital Control |
| **Date:** | 4/16/2024 |
| **Reply Requested:** | ☐ No ☒ Yes |

Please see enclosed documents for submission and approval.

- Full controls submittal Rev3 (Network Floorplans, Module Drawings, Flow Diagram, Sequence of Ops)
- Updated Dwgs for Rev2&3:
  1.0.1
  1.1.1
  1.1.2
  1.4.1
  1.5.1
  3.2.1
  3.2.2

Thank you,

**Luis Peña**
**Project Manager**

Mobile: 210-425-2200
Office: 210-702-3820
Address: 4738 Whirlwind Dr, San Antonio, TX 78217
URL: www.yatescompany.us

**NISD Chumbley ES**
13969 Blanco River Run
San Antonio, TX 78253

# Building Automation

Controls Submittal Rev 3

Plans Revision: 1/9/2023

**Job#: SA230015C**

FOR INFORMATION CONTACT:
Project Manager: Luis Pena
Sales Representative: David Glenney
Project Engineer: Dennis Schnellman, M.Eng.
Yates Company LLC

4738 Whirlwind Dr.
San Antonio, TX 78217
PHONE: 210-702-3820

Architect: Nextgen Architects
Engineer: Wallis Engineering Group, Inc.
Mechanical: Victoria Air Conditioning

| | | |
|---|---|---|
| 3 | Revision 3 | 4/16/2024 |
| 2 | Revision 2 | 2/20/2024 |
| 1 | Revision 1 | 8/11/2023 |
| 0 | SUBMITTED | 5/31/2023 |
| **REV #** | **DESCRIPTION** | **DATE** |
| AB | As-built | |

# Abbreviations/Symbols

| | | |
|---|---|---|
| ACU | - | Air Conditioning Unit |
| AFF | - | Above Finished Floor |
| AHU | - | Air Handling Unit |
| AI | - | Analog Input |
| ALM | - | Alarm |
| AMP | - | Ampere |
| AO | - | Analog Output |
| AUTO | - | Automatic |
| AUX | - | Auxiliary |
| AWG | - | American Wire Gauge |
| BAI | - | BACnet Analog Input |
| BAO | - | BACnet Analog Output |
| BAS | - | Building Automation System |
| BBI | - | BACnet Binary Input |
| BBO | - | BACnet Binary Output |
| BH | - | Basin Heater |
| BI | - | Binary Input |
| BLR | - | Boiler |
| BO | - | Binary Output |
| BOM | - | Bill Of Materials |
| BTU | - | British Thermal Units |
| C | - | Celsius |
| CAV | - | Constant Air Volume |
| CCW | - | Counter Clockwise |
| CD | - | Cooling Deck |
| CFM | - | Cubic Feet Per Minute |
| CHLR | - | Chiller |
| CHW | - | Chilled Water |
| CHP | - | Chilled Water Pump |
| CHWR | - | Chilled Water Return |
| CHWS | - | Chilled Water Supply |
| CHWV | - | Chilled Water Valve |
| CM | - | Control Module |
| CRAC | - | Computer Room Air Conditioner |
| CRAH | - | Computer Room Air Handler |
| CRU | - | Computer Room Unit |
| CT | - | Cooling Tower |
| CTRL | - | Control |
| CU | - | Condensing Unit |
| CUH | - | Cabinet Unit Heater |
| CW | - | Clockwise |
| CWP | - | Condenser Water Pump |
| CWR | - | Condenser Water Return |
| CWS | - | Condenser Water Supply |
| DA | - | Discharge Air |
| DAT | - | Discharge Air Temperature |
| DD | - | Double Duct |
| DDC | - | Direct Digital Controls |
| DEV | - | Device |
| DH | - | Duct Heater |
| DI | - | Digital Input |
| DMPR | - | Damper |
| DO | - | Digital Output |
| DP | - | Differential Pressure |
| DPDT | - | Double Pole Double Throw |
| DPS | - | Differential Pressure Switch |
| DPST | - | Double Pole Single Throw |
| DPT | - | Differential Pressure Transducer |
| DWG | - | Drawing |
| DX | - | Direct Expansion |
| (E) | - | Existing |
| EA | - | Exhaust Air |
| EAD | - | Exhaust Air Damper |
| ECON | - | Economizer |
| EDH | - | Electric Duct Heater |
| EF | - | Exhaust Fan |
| EPO | - | Emergency Power Off |
| EVAP | - | Evaporator |
| F | - | Fahrenheit |
| FCU | - | Fan Coil Unit |
| FO | - | Fuel Oil |
| FOP | - | Fuel Oil Pump |
| FS | - | Flow Switch |
| GND | - | Ground |

| | | |
|---|---|---|
| GEN | - | Generator |
| GPM | - | Gallons Per Minute |
| H2 | - | Hydrogen |
| HD | - | Heating Deck |
| HGR | - | Hot Gas Reheat |
| HOA | - | Hand/Off/Auto |
| HP | - | Heat Pump |
| HRU | - | Heat Recovery Unit |
| HX | - | Heat Exchanger |
| HU | - | Humidifier |
| HW | - | Hot Water |
| HWP | - | Hot Water Pump |
| HWR | - | Hot Water Return |
| HWS | - | Hot Water Supply |
| I/O | - | Input/Output |
| IAQ | - | Indoor Air Quality |
| IP | - | Internet Protocol |
| mA | - | Milliamp |
| MAT | - | Mixed Air Temperature |
| MAU | - | Makeup Air Unit |
| MAX | - | Maximum |
| MGR | - | Manager |
| MIN | - | Minimum |
| MISC | - | Miscellaneous |
| NC | - | Normally Closed |
| NO | - | Normally Open |
| OA | - | Outdoor Air |
| OAD | - | Outdoor Air Damper |
| OAH | - | Outdoor Air Humidity |
| OAT | - | Outdoor Air Temperature |
| OAT/H | - | Outdoor Air Temperature / Humidity |
| OPS | - | Oil Pressure Switch |
| PCHP | - | Primary Chilled Water Pump |
| PCHWR | - | Primary Chilled Water Return |
| PCHWS | - | Primary Chilled Water Supply |
| PDU | - | Power Distribution Unit |
| PPM | - | Parts Per Million |
| PSI | - | Pounds Per Square Inch |
| PWR | - | Power |
| R | - | Relay |
| RA | - | Return Air |
| RAD | - | Return Air Damper |
| RF | - | Return Fan |
| RH | - | Relative Humidity |
| RTU | - | Rooftop Unit |
| S/S | - | Start / Stop |
| SA | - | Supply Air |
| SAT | - | Supply Air Temperature |
| SCHP | - | Secondary Chilled Water Pump |
| SCHWR | - | Secondary Chilled Water Return |
| SCHWS | - | Secondary Chilled Water Supply |
| SD | - | Smoke Detector |
| SF | - | Supply Fan |
| SPDT | - | Single Pole Double Throw |
| SPST | - | Single Pole Single Throw |
| STS | - | Static Transfer Switch |
| TB | - | Terminal Block |
| TCP | - | Temperature Control Panel |
| TEMP | - | Temperature |
| TX | - | Transformer |
| UH | - | Unit Heater |
| UPS | - | Uninterrupted Power Supply |
| UV | - | Unit Ventilator |
| VA | - | Apparent Power (Voltage * Amperage) |
| VAC | - | AC Voltage |
| VAV | - | Variable Air Volume |
| VDC | - | DC Voltage |
| VFD | - | Variable Frequency Drive |
| VP | - | Velocity Pressure |
| VSD | - | Variable Speed Drive |
| VVT | - | Variable Volume Terminal Unit |
| "WC | - | Inches of Water Column |
| WSHP | - | Water Source Heat Pump |
| ZD | - | Zone Damper |

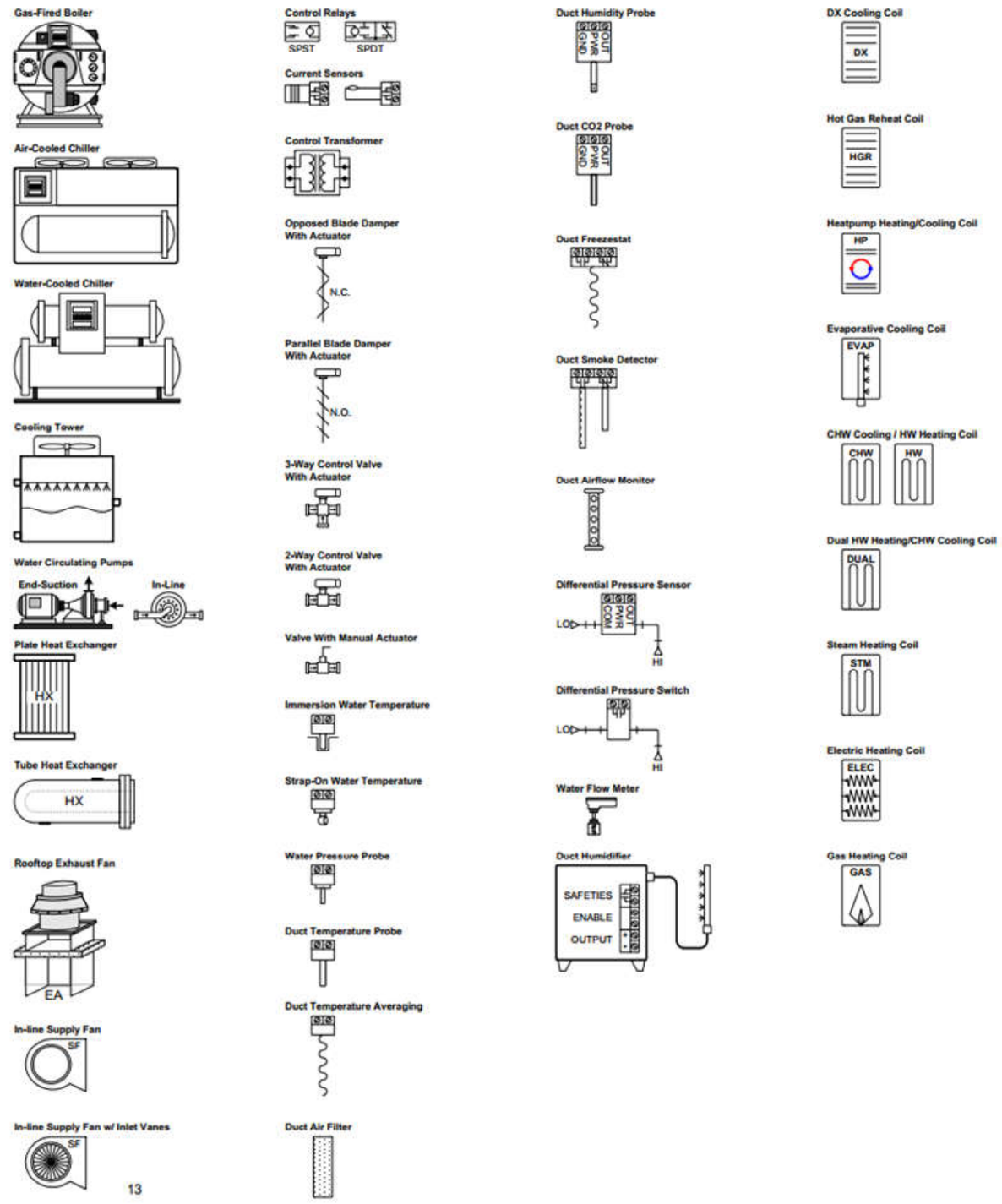




General 1
Abbreviations, Symbols
DWG # 0.1
JOB # WWPW

NISD Village at West Pointe West ES
San Antonio, TX

Drawn:
ENG: Dennis Schnellman

| REV # | DESCRIPTION | DATE |
|---|---|---|
| 0 | SUBMITTED | 4/28/2023 |

Yates Co
4738 Whirlwind Dr.
San Antonio, TX 78217
Phone: 2107023820

# Installation Notes

## Network Configurations

A network can be in a daisy-chain or hybrid configuration if repeaters are used. Each network segment must be in a daisy-chain configuration.

**Sample hybrid configurations:**

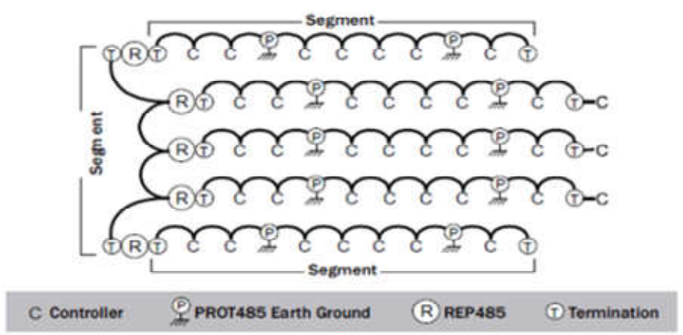


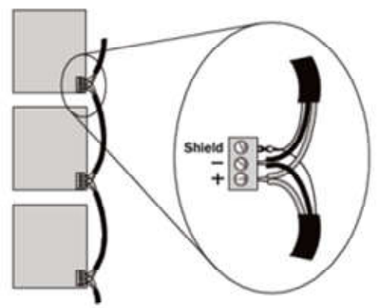


## MS/TP & ARCNET Network Configuration

Each segment of a network must:
-Be wired in a daisy-chain configuration
-Be no longer than 2000 feet (610 meters)
-Have 32 or fewer devices (controllers and repeaters)
-Have one of the following:
- -The End of Net switch set to Yes on the Open controller that is at the end of the network segment. This adds bias and prevent signal distortions.
- -A BT485 at each end (unless the segment is less than 10 feet [3 meters] long) to add bias and prevent signal distortions due to echoing.
- -A 1/2 watt, 120 Ohm terminator at each end to prevent signal distortions.

## Addressing Devices

Each Open controller on the MS/TP network must have a unique BACnet MS/TP MAC address, which is set by the controller's rotary address switches. Valid Addresses are 1-99.

## Biasing Terminators

The BT485 prevents end-of-line reflections, noise, and signal distortion by effectively terminating and biasing each network segment.

To connect to a UPC Open:

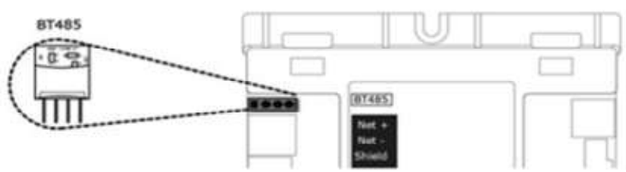


1 Push the BT485 onto the BT485 connector located near the BACnet connector.

**NOTE** The BT485 has no polarity associated with it.

2 Verify the LED turns on.

To connect to an Open router:

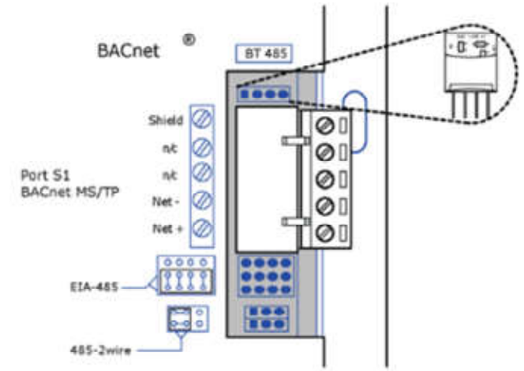


## Repeaters

The REP485 is a repeater that boosts communication signals over lengthy runs of wire. A repeater must be installed after every 30 controllers, after 2000 feet, or at each branch of a hybrid network. Each repeater begins a new network segment.

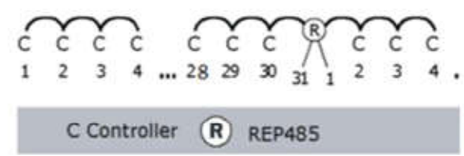


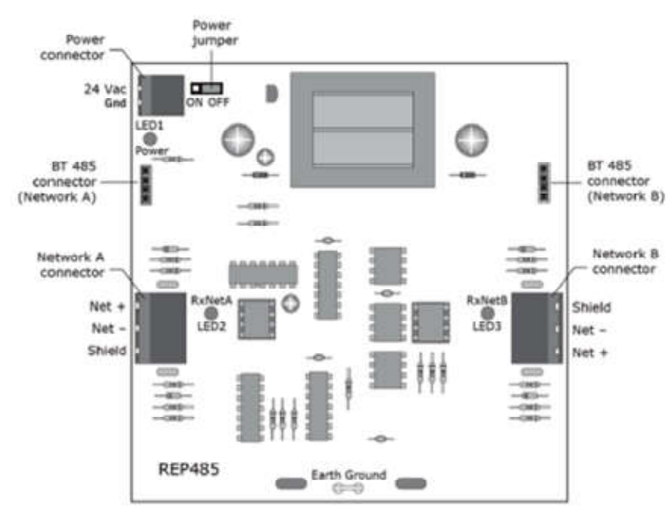




General 2
Installation Notes
DWG # 0.2
JOB # WWPW
NISD Village at West Pointe West ES
San Antonio, TX

| REV # | DESCRIPTION | DATE |
|---|---|---|
| 0 | SUBMITTED | 4/28/2023 |

Drawn: ENG: Dennis Schnellman

Yates Co
4738 Whirlwind Dr.
San Antonio, TX 78217
Phone: 2107023820

# Cable Specification Chart

## STANDARD CABLE SPECIFICATIONS AND ABBREVIATIONS

| | Cable Line Types | Typical Application | Wire Type | Manufacturer | Part Number | Color | Circuit Type |
|---|---|---|---|---|---|---|---|
| Communications | Ethernet / CAT5e | NETWORK WIRE<br>BACNET/IP / Ethernet | 24 AWG / 4 CONDUCTORS; STRANDED, SHIELDED, PLENUM RATED. | Connect Air<br>209-221-6900 | W224P-2175B OR CORE APPROVED EQUIVALENT.<br>W222P-1005LT (VERIFY) FOR WET LOCATIONS | BLUE JACKET | NETWORK COMMUNICATIONS |
| Communications | Global/Net | Primary Net Wire (RS485) | 22 AWG / 2 PAIR; STRANDED, SHIELDED, PLENUM RATED & TWISTED PAIR. LOW CAPACITANCE. | Connect Air<br>209-221-6900 | W222P-2004RIB (BLUE JACKET) (PLENUM) OR<br>W222P-1005B (GREY JACKET) (PVC) OR<br>CORE APPROVED EQUIVALENT.<br>W221P-1876 (VERIFY) FOR WET LOCATIONS. | WHITE<br>BLACK<br>WITH BLUE JACKET.<br>USE GREY JACKET FOR PVC | GLOBAL NET+ (G+)<br>GLOBAL NET+ (G-)<br>NET COMMS+ (N+)<br>NET COMMS- (N-) |
| Communications | Subnet | Subnet Wire (RS485) | 22 AWG / 1 PAIR; STRANDED, SHIELDED, PLENUM RATED & TWISTED PAIR. | Connect Air<br>209-221-6900 | W221P-2002B (BLUE JACKET) OR<br>DEALER APPROVED EQUIVALENT.<br>W221P-1876 (VERIFY) FOR WET LOCATIONS. | WHITE<br>BLACK<br>WITH BLUE JACKET | NET+<br>NET- |
| Communications | ARCNET | ARCNET COMMUNICATION | 22 AWG / SINGLE TWISTED SHIELDED PAIR, PLENUM RATED, LOW CAPACITANCE. | Connect Air<br>209-221-6900 | W221P-2270RIB (SHIELDED) OR CORE APPROVED EQUIVALENT. | ORANGE JACKET. | NET+<br>NET- |
| Communications | Modbus RS485 / BACnet MS/TP | MODBUS COMMUNICATION<br>BACNET COMMUNICATION | 18 AWG / 2 CONDUCTORS; STRANDED, SHIELDED, PLENUM RATED & TWISTED PAIR. LOW CAPACITANCE. | Connect Air<br>209-221-6900 | W181P-2028XYB OR CORE APPROVED EQUIVALENT. | WHITE<br>BLACK<br>WITH YELLOW JACKET | NET+<br>NET- |
| Communications | 18/2 SHLD | COMMUNICATION RS-485 2-WIRE<br>2-WIRE MODBUS<br>I/O REQUIRING SHIELD | 18 AWG / 2 CONDUCTORS; STRANDED, SHIELDED, PLENUM RATED & TWISTED PAIR. | Connect Air<br>209-221-6900 | W181P-2040BB/R OR CORE APPROVED EQUIVALENT. | RED<br>BLACK<br>WITH WHITE JACKET | NET+ OR TX OR +<br>NET- OR RX OR - |
| Communications | Modbus RS485 (4) | COMMUNICATION RS-485 4-WIRE<br>4-WIRE MODBUS<br>I/O REQUIRING SHIELD | 18 AWG / 4 CONDUCTORS; STRANDED, SHIELDED, PLENUM RATED. | Connect Air<br>209-221-6900 | W184C-2059B OR CORE APPROVED EQUIVALENT. | BLACK, WHITE, RED, GREEN<br>WITH WHITE JACKET | CLASS 2 WIRING ONLY |
| Inputs / Outputs | 18/2 UNSHLD | I/O WIRING | 18 AWG / 2 CONDUCTORS; STRANDED, UNSHIELDED, PLENUM RATED & TWISTED PAIR. | Connect Air<br>209-221-6900 | W181P-2051 OR CORE APPROVED EQUIVALENT. | RED<br>BLACK<br>WITH WHITE JACKET / PURPLE STRIPE | INA<br>INB<br>CLASS 2 WIRING ONLY |
| Inputs / Outputs | 18/3 UNSHLD | I/O WIRING | 18 AWG / 3 CONDUCTORS; STRANDED, UNSHIELDED, PLENUM RATED. | Connect Air<br>209-221-6900 | W183C-2052RIB OR CORE APPROVED EQUIVALENT. | BLACK, WHITE, RED<br>WITH WHITE JACKET | CLASS 2 WIRING ONLY |
| Inputs / Outputs | 18/4 SHLD | I/O WIRING | 18 AWG / 4 CONDUCTORS; STRANDED, SHIELDED, PLENUM RATED. | Connect Air<br>209-221-6900 | W184C-2059RIB OR CORE APPROVED EQUIVALENT. | BLACK, WHITE, RED, GREEN<br>WITH WHITE JACKET | CLASS 2 WIRING ONLY |
| Inputs / Outputs | 18/x UNSHLD | I/O WIRING | 18 AWG / 6 CONDUCTORS; STRANDED, UNSHIELDED, PLENUM RATED.<br>18 AWG / 8 CONDUCTORS.<br>18 AWG / 10 CONDUCTORS.<br>18 AWG / 12 CONDUCTORS. | Connect Air<br>209-221-6900 | W186C-2054B<br>W188C-2046B<br>W1810C-2078B<br>W1812C-2148B<br>OR CORE APPROVED EQUIVALENT | BLACK, RED,<br>WHITE, GREEN,<br>BROWN, BLUE,<br>ORANGE, YELLOW,<br>VIOLET, GRAY,<br>PINK, TAN.<br>WITH WHITE JACKET | CLASS 2 WIRING ONLY |
| Inputs / Outputs | 18/3 SHLD | I/O WIRING REQUIRING SHIELDING | 18 AWG / 3 CONDUCTORS; STRANDED, SHIELDED, PLENUM RATED. | Connect Air<br>209-221-6900 | W183C-2058RIB OR CORE APPROVED EQUIVALENT. | BLACK, WHITE, RED<br>WITH WHITE JACKET | CLASS 2 WIRING ONLY |
| Power | 24VAC | POWER WIRING | 16 AWG / 2 CONDUCTORS; STRANDED, UNSHIELDED, PLENUM RATED. | Connect Air<br>209-221-6900 | W161P-2062B/RB OR CORE APPROVED EQUIVALENT. | RED<br>BLACK<br>WHITE JACKET | 24 VAC POWER INTERNAL TO PANEL (T1)<br>24 VAC NEUTRAL INTERNAL TO PANEL (T2)<br>24 VAC POWER TO FIELD DEVICES (T3)<br>24 VAC NEUTRAL TO FIELD DEVICES (T4) |
| Power | 24VAC | POWER WIRING<br>(FOR LONG RUNS/FIELD DEVICES ONLY) | 14 AWG / 2 CONDUCTORS; STRANDED, UNSHIELDED, PLENUM RATED. | Connect Air<br>209-221-6900 | W141P-2014 OR CORE APPROVED EQUIVALENT. | RED<br>BLACK<br>WHITE JACKET / RED STRIPE | 24 VAC POWER INTERNAL TO PANEL (T1)<br>24 VAC NEUTRAL INTERNAL TO PANEL (T2)<br>24 VAC POWER TO FIELD DEVICES (T3)<br>24 VAC NEUTRAL TO FIELD DEVICES (T4) |
| Power | TFFN 16GA | CONTROL PANEL INTERIOR WIRE | 16 AWG TFFN STRANDED WIRE | Connect Air<br>209-221-6900 | W161C-1293 OR CORE APPROVED EQUIVALENT. | BLACK<br>WHITE<br>GREEN or GREEN/YELLOW<br>BLUE<br>WHITE<br>RED<br>WHITE<br>YELLOW<br>ORANGE<br>BROWN<br>BLACK<br>RED | 120 VAC HOT<br>120 VAC NEUTRAL<br>GROUND<br>24 VAC H POWER TO CONTROLLERS (T1)<br>24 VAC N POWER TO CONTROLLERS (T2)<br>24 VAC H POWER TO FIELD DEVICES (T3)<br>24 VAC N POWER TO FIELD DEVICES (T4)<br>INPUTS (DIs, AIs)<br>DIGITAL OUTPUTS (AOs)<br>COMMON FROM POWERED AOs<br>24 VDC+ |

Note: Any wire substitutions must be approved by the project manager.

## Abbreviations

| | |
|---|---|
| AWG | - American Wire Gauge |
| CAT-5,5e,6,6e | - Ethernet Cable |
| CLASS 2 | -NEC Classification. For Indoor Use, Protection against falling dirt, and dripping/light splashing |
| EIA-232 | - Communications Protocol |
| EIA-485 | - Communications Protocol |
| G or GND | - Ground |
| I/O | - Input/Output |
| INA / INB | - Input A / Input B |
| LS5V | - +5vdc Logistat |
| MS/TP | - Master-Slave/Token-Passing Protocol |
| NEC | - National Electrical Code |
| NET+/- | - Positive/Negative Polarity Designation for Communications |
| RX+/- | - Receive Positive/Negative Polarity Designation for Communications |
| ST / SC | - Fiber Optic Connector |
| ST | - Straight Tip Fiber Optic Connector |
| TEMP | - Temperature °F / °C |
| TFFN | - A thermoplastic-insulated, nylon-jacketed conductor signed for us in dry locations and an operating temperature of up to 90°C |
| TX+/- | - Transmit Positive/Negative Polarity Designation for Communications |
| VAC | - Voltage Alternating Current |
| VDC+ | - Voltage Direct Current, Positive side. |



General 3
Cable Specifications
DWG # 0.3
JOB # WWPW
NISD Village at West Pointe West ES
San Antonio, TX
Drawn:
ENG: Dennis Schnellman
4/28/2023
SUBMITTED
0
REV # DATE DESCRIPTION

Yates Co
4738 Whirlwind Dr.
San Antonio, TX 78217
Phone: 2107023820

**Panel and Field Device Notes (typical of all pages)**

## 1 ELECTRICAL POWER POVISIONS:

A. Primary power will be provided under Division 26 by the electrical contractor to the panel locations indicated on the mechanical & electrical drawings. Provide step down
transformers at panel enclosure locations. Provide all necessary fuses and circuit protection devices.

B. Power will be provided to the controllers serving fan powered terminal units with electric heat via the control transformer provided with the unit.

C. All components of the EMCS shall be powered from the sources above. Provide final terminations from the locations indicated on the Division 23 Drawings

## 2 PANELS AND ENCLOSURES:

A. Provide panels and enclosures for all components of the EMCS, which are susceptible to physical or environmental damage.

B. Interior panels and enclosures shall be NEMA 1 rated painted steel panels with locking door.

C. Exterior mounted panels and enclosures shall be NEMA 4 painted steel panels with locking door.

D. Panels for USCs shall be mounted on the outside of all unit ventilators and fan coil units with three feet of wall clearance in front of them and no higher than 7 feet to the bottom of the panel.

## 3 LABELING and WARNING NOTICES:

A. Provide labeling for all control panels and enclosures.

B. Provide labeling of all control wires and input/output points at the controller and at the control device; the label at each end of the wire shall be the same Labels shall be machine generated, typed and clearly legible with a maximum of 17 characters. Hand written labels or labels written on the control wire jacket will not be acceptable. Each label shall be unique to its function and shall reference the applicable system. For example “AHU-1 SAT” will indicate the supply air temperature sensor for AHU-1. Improper labeling shall be removed and shall require re-commissioning of the control device and controller to document correct functionality.

C. Provide high voltage warning notices at all equipment controlled by the EMCS and at all associated motor starters when used by equipment controller.

## 4 TUBING AND PIPING:

A. Provide tubing and piping as required for the field instrumentation.

B. Tubing within equipment rooms, vertical risers, and penetrations to ductwork shall be either copper pipe or shall be plastic tubing within conduit. Tubing for all water-based instrumentation shall be copper pipe. Identify the type of tubing proposed in the shop drawing submittal.

C. Provide suitable bulk head fittings for duct and panel penetrations.

D. Tubing in plenum rated areas may be plastic tubing. Polyethylene tubing shall meet, at minimum, the following requirements: flame retardant; crack resistant; 300 psi burst pressure.

## 5 CONDUIT AND FITTINGS:

A. Provide all conduits, raceways and fittings for the EMCS monitoring, communication and
control cabling. All work shall meet all applicable codes.
B. Conduit, where required, shall meet, the requirements specified within Division 26.
C. EMCS monitoring and control cable shall not share conduit with cable carrying voltages
in excess of 90 VAC.

## 6 CABLING:

A. Provide all cables for the EMCS. Cable shall meet, at minimum, the following requirements:
1. Minimum 98% conductivity stranded copper.
2. Proper impedance for the application as recommended by the EMCS component manufacturer.
3. Monitoring and control cable shall be #18 AWG or larger, dependent on the application.
4. Management Level Network cable shall be CAT 6, 24 gauge unshielded.
5. Automation Level Network cable shall be #22 AWG shielded.
6. Shield shall be grounded at the CCP, UC, or control panel. Ground at one end only to avoid ground loops. Tie all sensor drain wires from shields and terminate to earth ground.
Tape back shield at sensor end.
7. Identification of each end at the termination point. Identification should be indicated on and correspond to the record drawings.
B. 120 VAC power wiring shall be of #12 AWG solid conductor or larger as required

## 7 INSTALLATION OF COMPONENTS:

A. Provide all interlock and control wiring. All wiring shall be installed in a neat and professional manner in accordance with specification Division 26 and all national, state and local electrical codes.

B. Provide wire and wiring techniques recommended by equipment manufacturers. Control wiring shall not be installed in power circuit raceways. Magnetic starters and disconnect switches shall not be used as junction boxes. Provide auxiliary junction boxes as required. Coordinate location and arrangement of all control equipment with the Owner's Representative prior to rough-in. Provide auxiliary pilot duty relays on motor starters as required for control function.

C. Electrical Contractor shall provide 120 or 277 volt power at a junction box within 48” of the controller. The BAS Contractor shall coordinate with the Electrical Contractor to identify locations of power requirements prior to the installation of the controls.

D. Conduit for control wiring shall be provided whenever one of the following:
1. Conduit is indicated on the drawings or specifically required by the specifications.
2. Cabling runs through inaccessible areas such as within partitions/walls, above closed in ceilings, under floor; within trenches and underground; on the exterior of the building; exposed on the surface of the building; when encased in concrete or other material that makes the cable inaccessible or when located such that access to the cable is not readily obtained.
3. Cable within mechanical, telecommunications and electrical equipment rooms and control rooms.
4. Conduit shall be installed, inside wall from sensor box to above the wall, for all wall mounted temperature, humidity and CO2 sensors conditions exists.

E. Control wiring located above an accessible ceiling space may be plenum rated cable. Plenum rated wire shall be bundled and routed at right angles to the building lines and secured to the building structure every 15 feet.

F. When communication bus enters or exits a building, a surge suppressor shall be installed. The surge suppressor shall be installed according to the controls manufacturer’s instructions.

G. Provide sleeves for all cable and conduit passing through walls, partitions, structural components, floors and roof.

H. All sensor wiring shall be labeled to indicate the origination (at the device) and destination of data (at the control panel). The description shall indicate the type and location of the control device such as “AHU-1 SA temp” or “VAV 1-1 space temp”.

I. Wall temp sensors at 48” above the finished floor to comply with ADA requirements and to match the height of the light switches. Mount humidity sensor at equal height to wall temperature sensor

General 4
Installation Notes
DWG # 0.4
JOB # VWPW
NISD Village at West Pointe West ES
San Antonio, TX

| REV # | DESCRIPTION | DATE |
|---|---|---|
| 0 | SUBMITTED | 4/28/2023 |

Drawn:
ENG: Dennis Schnellman

Yates Co
4738 Whirlwind Dr.
San Antonio, TX 78217
Phone: 2107023820

## Bill of Materials

| DID | Quantity | Part # | Manufacturer | Description |
|---|---|---|---|---|
| CT | 2 | A/MSCS | ACI | Fixed Current Switch, Split Core, NO, 0 to 150A Range, <0.55A Trip Point |
| CT-A | 50 | A/MSCS-A | ACI | Current Switch, Split Core, NO, 0 to 150A Range, Adj. Trip Point |
| OV-DS | 1 | PS-2022 | Aleph | Overhead door contact, SPDT |
| FLOAT | 13 | AG-1100 | Aquaguard | Float switch, Edge mount, NC |
| FLOWBD | 1 | FT-T## | Badger | Badger Meter Recordall Turbo Series Flow Meter |
| FLOWSI | 1 | FT-T## | Badger | Badger Meter Recordall Turbo Series Flow Meter |
| BG | 1 | BA/BG | BAPI | Larger BAPI-Guard Thermostat Protector |
| BG2 | 1 | BA/BG2 | BAPI | Smaller BAPI-Guard 2 Thermostat Protector |
| CO2-OA | 1 | BA/DCD05-V-BB | BAPI | Outside Air CO2 Transmitter, 0-5VDC, +/-5% FS |
| DP-D | 18 | BA/ZPM-SR-ST-D | BAPI | Duct Static Pressure, 0-1/2/2.5/3/5 "wc, 0-5/10 VDC, 4-20 mA, +/-0.25% |
| DP-S | 17 | BA/ZPM-LR-NT-D | BAPI | Static Pressure, 0-0.1/0.25/0.5/0.75/1 "wc, 0-5/10 VDC, 4-20 mA, +/-0.25% |
| T-A-24 | 33 | BA/10K-2-A-24'-BBX | BAPI | Duct 10K-2 Thermistor, Averaging, 24' |
| T-A-12 | 1 | BA/10K-2-A-12'-BBX | BAPI | Duct 10K-2 Thermistor, Averaging, 12' |
| T-A-C | 6 | BA/FPB-50 | BAPI | Flexible sensor mounting bracket (50 pack) |
| TB-2 | 2 | BA/10K-2-TB-M304-2-HB-NB-10 | BAPI | 2" Thermobuffer; 10K-2 Thermistor; Hanging bracket |
| T-D-4 | 83 | BA/10K-2-D-4"-BBX | BAPI | Duct, 10K-2 Thermistor, Probe, 4" |
| T-D-8 | 22 | BA/10K-2-D-8"-BBX | BAPI | Duct, 10K-2 Thermistor, Probe, 8" |
| TH-D | 9 | BA/10K-2-H200-D-BB2 | BAPI | Duct Temp/Humidity Combo, 0-5/10 VD/4-20 mA, 2% |
| TH-OA | 1 | BA/10K-2-H200-O-BB2 | BAPI | Outside Air Temp/Humidity Combo, 0-5/10 VDC/4-20mA, 2% |
| T-I-4 | 15 | BA/10K-2-I-4"-BB2 | BAPI | Immersion, 10K-2 Thermistor, 4" (no well) |
| T-S-1 | 12 | BA/10K-2-S-BBX | BAPI | Strap-on, 10K-2 Thermistor, 2-4.5" pipe |
| TW-4 | 15 | BA/4"M316 | BAPI | Immersion Temp Sensor Thermowell, 4", 316 SS |
| WD-1.5 | 6 | WD-B40X80N | BAPI | 1 1/2"W X 3"H Narrow Slot, Wiring Duct & Cover, 1pc, 6ft |
| ZPS-ACC01 | 17 | BA/ZPS-ACC01 | BAPI | Space Static Pressure Wall Plate |
| ZPS-ACC10 | 17 | BA/ZPS-ACC10 | BAPI | Outdoor pressure port, side mount |
| ZT-SP | 12 | BA/10K-2-SP-631 | BAPI | Wall Temp Sensor, Stainless Steel, Louvered |
| VLV | 2 | See Valve Schedule | Belimo | Control Valve |
| DIN | 17 | DRMR3 | c3controls | DIN Rail, Slotted, 1 m Length, 35 mm Width x 7.5 mm, Plated Steel |
| END PLATE | 9 | WTB2-EPW2/4 | c3controls | Separator Plates (50 pack), 8 mm, Fits 35 mm DIN Rail, Grey Non-metallic |
| SEP PLATE | 9 | WTB2-EB | c3controls | Separator Plates (50 pack), 8 mm, Fits 35 mm DIN Rail, Grey Non-metallic |
| TERM BLOCK | 170 | WTB2-W2 | c3controls | Terminal Block, 5 mm width, DIN-mount |
| WD-1.5 | 23 | WD-B40X80N | c3controls | 1 1/2"W X 3"H Narrow Slot, Wiring Duct & Cover, 1pc, 6ft |
| WD-3 | 4 | WD-B80X80N | c3controls | 3"W X 3"H Narrow Slot, Wiring Duct & Cover, 1pc, 6ft |
| BT485 | 1 | BT485 | Carrier | Network Termination & Bias (16 pack) |
| MPCXP1628-NR | 2 | TV-MPCXP1628-NR | Carrier | TruVu MPCXP (28 UI, 16 UO); up to (9) MPC XPIO expanders; 200 Modbus; 1500 TPI BACnet |
| OPN-APP | 9 | OPN-APP | Carrier | Prog. Controller (5 BO, 6 UI, 3 AO), 2 Equipment |
| OPN-B3-P-02 | 83 | OPN-B3-P-02 | Carrier | Programmable Zone II controller with Air Flow, Actuator, AO and 3 BO (45 in-lb) |
| OPN-UC | 17 | OPN-UC | Carrier | Prog. Controller (5 BO, 6 UI), 5 Equipment |
| OPN-UCXP | 15 | OPN-UCXP | Carrier | UC Open XP (6 BO, 12 UI, 6 AO), Programmable, Multiple Equipment |
| OPN-UCXPIO | 1 | OPN-UCXPIO | Carrier | UC Open XP Expander (8 BO, 8 BI, 8AI), Need OPN-UCXP |
| PROT485 | 10 | PROT485 | Carrier | Network Protection Board |
| REP485 | 2 | REP485 | Carrier | Network Repeater (every 31 controllers or 2000 ft.) |
| XT-LB | 2 | XT-LB | Carrier | i-Vu XT Router; up to 60 controllers on BACnet MS/TP |
| ZS2-CAR | 9 | ZS2-CAR | Carrier | ZS Standard; Carrier brand space temp sensor |
| ZS2-H-CAR | 1 | ZS2-H-CAR | Carrier | ZS Standard with Humidity; Carrier brand space temp sensor |
| ZS2PL-CAR | 74 | ZS2PL-CAR | Carrier | ZS Plus; Carrier brand space temp sensor, Setpt Adj, TLO |
| ZS2PL-H-CAR | 5 | ZS2PL-H-CAR | Carrier | ZS Plus; Carrier brand space temp sensor, Setpt Adj, TLO w/ humidity |
| HL-T | 2 | A122-7 | Columbus Electric | Wall Hi Limit Thermostat, 120-240 VAC, 80-130°F |
| W-T | 1 | ET9SRTS | Columbus Electric | Wall Thermostat, 120-277 VAC, 50-90°F |
| FLOWMU | 2 | WNT-A-C-07-1 | Dwyer | Water Flow Meter, Multi-Jet NSF Certified, 1.5" |
| WGP | 4 | 628-12-CB-P9-E1-S8-LCD | Dwyer | Wet Gauge Pressure Transducer, 0-200 PSI, 0-5/10 VDC |
| CT-A-5 | 1 | RIBXGTV5-10 | Functional Devices | Current Transducer, Split Core, 0-10 Amp, 0-5 Vdc Terminal Output |
| RIB | 36 | RIBU1C | Functional Devices | Enclosed Relay 10 Amp SPDT, 10-30 VAC/VDC or 120 VAC Coil |
| RIB-P | 23 | RIB2401B | Functional Devices | Enclosed Relay 20 Amp SPDT, 10-30 VAC/VDC or 120 VAC Coil |
| XF100 | 19 | TR100VA001 | Functional Devices | Control Transformer (120 VAC Input - 24 VAC Output) |
| XF50 | 10 | TR50VA004 | Functional Devices | Control Transformer (120/240/277/480 VAC Input - 24 VAC Output |
| PANEL-12x12 | 9 | AHE12X12X4 | Hoffman | Enclosure, Wall-mount, Hinged, Steel, NEMA1, 12"x12"x4" |
| PANEL-16x12 | 1 | AHE16X12X4 | Hoffman | Enclosure, Wall-mount, Hinged, Steel, NEMA1, 16"x12"x4" |
| PANEL-20x20 | 2 | A20N20ALP+GRAY | Hoffman | Enclosure, Wall-mount, Hinged, Steel, NEMA1, 20"x20"x6" |
| PANEL-24x24 | 8 | A24N24ALP+GRAY | Hoffman | Enclosure, Wall-mount, Hinged, Steel, NEMA1, 24"x24"x6" |
| PANEL-LOCK | 19 | AL12AR | Hoffman | Enclosure Key Lock Kit |
| PERF-20x20 | 2 | A20N20MPP | Hoffman | Enclosure, Perforated Back Plate, 20"x20" |
| PERF-24x24 | 8 | A24N24MPP | Hoffman | Enclosure, Perforated Back Plate, 24"x24" |
| PERF-24x24 | 9 | A24P24 | Hoffman | Enclosure, Back Plate, 24"x24" |
| PANEL-24x24 | 9 | A24R248HCLO | Hoffman | Enclosure, Wall-mount, Hinged, NEMA3R, 24"x24"x8" |
| BUZZER | 1 | UZ6-12 | IDEC | Buzzer,Round,Sound Lvl 80db,Frequency 2kHz,24 VAC,Current 7mA,70mm,-4F to 131F |
| DC60 | 2 | PS5R-VD24 | IDEC | 120VAC:24VDC Power Supply; 60W, 2.5A |
| R-BASE | 15 | SH1B-05 | IDEC | Pilot Relay (Plug-in) Base |
| RESET | 1 | AL6M-M1-B | IDEC | Pushbutton Reset |
| RS-24A | 15 | RH1B-UAC24V | IDEC | Pilot Relay (Plug-in), 10 Amp SPDT, 24VAC Coil |
| OVRDPB | 2 | HW4LM110G24V | IDEC | Unibody Pushbutton, Round, Green LED |
| RAD-1 | 1 | RAD-1 | Kele | Remote Alarm Indication Station |
| SWITCH | 19 | T5225-W | Leviton | Single Pole Switch, Standard Receptacle; Self-grounding |
| FLOW-DISP | 1 | D-1202-22020 | Onicon | Water Meter Display Dual Meter |
| FLOW | 2 | F-1210 | Onicon | Water Flow Meter |
| AFT | 15 | See Schedule | See Schedule | Air Flow Station |
| DHISO1 | 1 | See Schedule | See Schedule | Control Damper Actuator |
| DHISO2 | 1 | See Schedule | See Schedule | Control Damper Actuator |
| EAD | 1 | See Schedule | See Schedule | Control Damper Actuator |
| ERAD | 9 | See Schedule | See Schedule | Control Damper Actuator |
| HWV | 76 | See Schedule | See Schedule | Control Valve |
| OAD | 14 | See Schedule | See Schedule | Control Damper Actuator |
| RAD | 14 | See Schedule | See Schedule | Control Damper Actuator |
| READ | 16 | See Schedule | See Schedule | Control Damper Actuator |
| VLV | 32 | See Schedule | See Schedule | Control Valve |
| ISO1 | 1 | See Valve Schedule | See Valve Schedule | Control Valve |
| ISO2 | 1 | See Valve Schedule | See Valve Schedule | Control Valve |
| TW-T | 1 | C412H | TORK | Spring-Wound Timer: 0 to 12 hr, Silver, 20 A Max. Amps @ 125VAC, 1 Gangs, DPST |
| CT-A-2 | 4 | H221SP | Veris | Current Transducer, 100-300 A Input, 4-20 mA Output, Split-Core |
| CWE2 | 24 | CWE2 | Veris | Wall CO2 Sensor, 0-5/10 VDC, 4-20 mA, 0-2000 ppm |

Summary Bill of Materials

DWG # 1.0.1

JOB # VWPW

NISD Village at West Pointe West ES

San Antonio, TX

| REV # | DESCRIPTION | DATE |
|---|---|---|
| 2 | Revision 2 | 2/20/2024 |
| 1 | Revision 1 | 8/11/2023 |
| 0 | SUBMITTED | 4/28/2023 |

Drawn:

ENG: Dennis Schnellman

Yates Co
4738 Whirlwind Dr.
San Antonio, TX 78217
Phone: 2107023820

## SA230015C NISD Village at West Pointe West ES - Valve Schedule Rev2 08312023

| Item | General Tag | Equipment Type | Service | Specific Valve Tag | Mfg | Quantity | Valve Type | Valve Config | Flow (gpm) | DP Max Design (psi) | DP Actual (psi) | Close Off (psi) | Req'd Min Cv | Valve Cv | Normal Position (2 VDC) | Fail Position | Valve Size (in.) | Line Size (in.) | Control Signal | Voltage | Valve Part # | Actuator Part # | Clip Position | Valve Assembly Part Number |
|---|---|---|---|---|---|---|---|---|---|---|---|---|---|---|---|---|---|---|---|---|---|---|---|---|
| 1 | Chiller Iso 449 | Chiller | Iso | CH-1 Iso Vlv | Belimo | 1 | Butterfly | 2-WAY | 449.0 | 3 | 0.08 | 200 | 259.23 | 1579.00 | N.O. | FLP | 6 | 6 | Open/Close | 24 VAC/VDC | F6150HD | PRBUP-3-T | N/A | F6150HD+PRBUP-3-T |
| 2 | Chiller Iso 449 | Chiller | Iso | CH-2 Iso Vlv | Belimo | 1 | Butterfly | 2-WAY | 449.0 | 3 | 0.08 | 200 | 259.23 | 1579.00 | N.O. | FLP | 6 | 6 | Open/Close | 24VAC/VDC | F6150HD | PRBUP-3-T | N/A | F6150HD+PRBUP-3-T |
| 3 | SZ AHU CHW 47 | SZ AHU | CHW | AH-1 CHW | Belimo | 1 | CCV | 2-WAY | 47.0 | 3 | 2.63 | 200 | 27.14 | 29.00 | N.C. | FLP | 2 | 2 1/2 | 2-10VDC | 24VAC/VDC | B248 | ARB24-SR | N/A | B248+ARB24-SR |
| 4 | SZ AHU CHW 22 | SZ AHU | CHW | AH-2 CHW | Belimo | 1 | CCV | 2-WAY | 22.0 | 3 | 1.34 | 200 | 12.70 | 19.00 | N.C. | FLP | 1 1/2 | 2 | 2-10VDC | 24VAC/VDC | B238 | ARB24-SR | N/A | B238+ARB24-SR |
| 5 | VAV AHU CHW 30 | VAV AHU | CHW | AH-3 CHW | Belimo | 1 | CCV | 3-WAY | 30.0 | 3 | 2.49 | 200 | 17.32 | 19.00 | N.C. | FLP | 1 1/2 | 2 | 2-10VDC | 24VAC/VDC | B338 | ARB24-SR | N/A | B338+ARB24-SR |
| 6 | SZ AHU CHW 74 | SZ AHU | CHW | AH-4 CHW | Belimo | 1 | CCV | 2-WAY | 74.0 | 3 | 1.52 | 200 | 42.72 | 60.00 | N.C. | FLP | 2 1/2 | 3 | 2-10VDC | 24VAC/VDC | B261 | ARX24-MFT | N/A | B261+ARX24-MFT |
| 7 | SZ AHU CHW 67 | SZ AHU | CHW | AH-5 CHW | Belimo | 1 | CCV | 2-WAY | 67.0 | 3 | 1.25 | 200 | 38.68 | 60.00 | N.C. | FLP | 2 1/2 | 3 | 2-10VDC | 24VAC/VDC | B261 | ARX24-MFT | N/A | B261+ARX24-MFT |
| 8 | SZ AHU CHW 43 | SZ AHU | CHW | AH-6 CHW | Belimo | 1 | CCV | 2-WAY | 43.0 | 3 | 2.20 | 200 | 24.83 | 29.00 | N.C. | FLP | 2 | 2 1/2 | 2-10VDC | 24VAC/VDC | B248 | ARB24-SR | N/A | B248+ARB24-SR |
| 9 | VAV AHU CHW 38 | VAV AHU | CHW | AH-7 CHW | Belimo | 1 | CCV | 2-WAY | 38.0 | 3 | 1.72 | 200 | 21.94 | 29.00 | N.C. | FLP | 1 1/2 | 2 | 2-10VDC | 24VAC/VDC | B239 | ARB24-SR | N/A | B239+ARB24-SR |
| 10 | VAV AHU CHW 30 | VAV AHU | CHW | AH-8 CHW | Belimo | 1 | CCV | 2-WAY | 30.0 | 3 | 2.49 | 200 | 17.32 | 19.00 | N.C. | FLP | 1 1/2 | 2 | 2-10VDC | 24VAC/VDC | B238 | ARB24-SR | N/A | B238+ARB24-SR |
| 11 | VAV AHU CHW 100 | VAV AHU | CHW | AH-9 CHW | Belimo | 1 | CCV | 2-WAY | 100.0 | 3 | 2.78 | 200 | 57.74 | 60.00 | N.C. | FLP | 2 1/2 | 3 | 2-10VDC | 24VAC/VDC | B261 | ARX24-MFT | N/A | B261+ARX24-MFT |
| 12 | VAV AHU CHW 101 | VAV AHU | CHW | AH-10 CHW | Belimo | 1 | CCV | 2-WAY | 101.0 | 3 | 2.83 | 200 | 58.31 | 60.00 | N.C. | FLP | 2 1/2 | 3 | 2-10VDC | 24VAC/VDC | B261 | ARX24-MFT | N/A | B261+ARX24-MFT |
| 13 | VAV AHU CHW 109 | VAV AHU | CHW | AH-11 CHW | Belimo | 1 | CCV | 2-WAY | 109.0 | 3 | 2.11 | 200 | 62.93 | 75.00 | N.C. | FLP | 2 1/2 | 3 | 2-10VDC | 24VAC/VDC | B262 | ARX24-MFT | N/A | B262+ARX24-MFT |
| 14 | VAV AHU CHW 103 | VAV AHU | CHW | AH-12 CHW | Belimo | 1 | CCV | 2-WAY | 103.0 | 3 | 2.95 | 200 | 59.47 | 60.00 | N.C. | FLP | 2 1/2 | 3 | 2-10VDC | 24VAC/VDC | B261 | ARX24-MFT | N/A | B261+ARX24-MFT |
| 15 | VAV AHU CHW 78 | VAV AHU | CHW | AH-13 CHW | Belimo | 1 | Globe | 3-WAY | 78.0 | 3 | 1.32 | 175 | 45.03 | 68.00 | N.C. | FLP | 2 1/2 | 3 | 2-10VDC | 24VAC/VDC | B350 | ARB24-SR | N/A | G765+EVX24-SR |
| 16 | VAV AHU CHW 70 | VAV AHU | CHW | AH-14 CHW | Belimo | 1 | CCV | 2-WAY | 70.0 | 3 | 1.36 | 200 | 40.41 | 60.00 | N.C. | FLP | 2 1/2 | 3 | 2-10VDC | 24VAC/VDC | B261 | ARX24-MFT | N/A | B261+ARX24-MFT |
| 17 | SZ AHU PHW 32 | SZ AHU | PHW | AH-1 PHW | Belimo | 1 | CCV | 2-WAY | 32.0 | 3 | 2.84 | 200 | 18.48 | 19.00 | N.O. | FLP | 1 1/2 | 2 | 2-10VDC | 24VAC/VDC | B238 | ARB24-SR | N/A | B238+ARB24-SR |
| 18 | SZ AHU PHW 6 | SZ AHU | PHW | AH-2 PHW | Belimo | 1 | CCV | 2-WAY | 6.0 | 3 | 0.36 | 200 | 3.46 | 10.00 | N.O. | FLP | 1 1/4 | 1 1/2 | 2-10VDC | 24VAC/VDC | B229 | LRB24-SR | N/A | B229+LRB24-SR |
| 19 | VAV AHU PHW 9 | VAV AHU | PHW | AH-3 PHW | Belimo | 1 | CCV | 3-WAY | 9.0 | 3 | 0.81 | 200 | 5.20 | 10.00 | N.O. | FLP | 1 1/4 | 1 1/2 | 2-10VDC | 24VAC/VDC | B329 | ARB24-SR | N/A | B329+ARB24-SR |
| 20 | SZ AHU PHW 17 | SZ AHU | PHW | AH-4 PHW | Belimo | 1 | CCV | 2-WAY | 17.0 | 3 | 2.89 | 200 | 9.81 | 10.00 | N.O. | FLP | 1 1/4 | 1 1/2 | 2-10VDC | 24VAC/VDC | B229 | LRB24-SR | N/A | B229+LRB24-SR |
| 21 | SZ AHU PHW 18 | SZ AHU | PHW | AH-5 PHW | Belimo | 1 | CCV | 2-WAY | 18.0 | 3 | 0.90 | 200 | 10.39 | 19.00 | N.O. | FLP | 1 1/4 | 1 1/2 | 2-10VDC | 24VAC/VDC | B230 | LRB24-SR | N/A | B230+LRB24-SR |
| 22 | SZ AHU PHW 12 | SZ AHU | PHW | AH-6 PHW | Belimo | 1 | CCV | 2-WAY | 12.0 | 3 | 1.44 | 200 | 6.93 | 10.00 | N.O. | FLP | 1 1/4 | 1 1/2 | 2-10VDC | 24VAC/VDC | B229 | LRB24-SR | N/A | B229+LRB24-SR |
| 23 | VAV AHU PHW 11 | VAV AHU | PHW | AH-7 PHW | Belimo | 1 | CCV | 2-WAY | 11.0 | 3 | 1.21 | 200 | 6.35 | 10.00 | N.O. | FLP | 1 1/4 | 1 1/2 | 2-10VDC | 24VAC/VDC | B229 | LRB24-SR | N/A | B229+LRB24-SR |
| 24 | VAV AHU PHW 9 | VAV AHU | PHW | AH-8 PHW | Belimo | 1 | CCV | 2-WAY | 9.0 | 3 | 0.81 | 200 | 5.20 | 10.00 | N.O. | FLP | 1 1/4 | 1 1/2 | 2-10VDC | 24VAC/VDC | B229 | LRB24-SR | N/A | B229+LRB24-SR |
| 25 | VAV AHU PHW 26 | VAV AHU | PHW | AH-9 PHW | Belimo | 1 | CCV | 2-WAY | 26.0 | 3 | 1.87 | 200 | 15.01 | 19.00 | N.O. | FLP | 1 1/2 | 2 | 2-10VDC | 24VAC/VDC | B238 | ARB24-SR | N/A | B238+ARB24-SR |
| 26 | VAV AHU PHW 26 | VAV AHU | PHW | AH-10 PHW | Belimo | 1 | CCV | 2-WAY | 26.0 | 3 | 1.87 | 200 | 15.01 | 19.00 | N.O. | FLP | 1 1/2 | 2 | 2-10VDC | 24VAC/VDC | B238 | ARB24-SR | N/A | B238+ARB24-SR |
| 27 | VAV AHU PHW 28 | VAV AHU | PHW | AH-11 PHW | Belimo | 1 | CCV | 2-WAY | 28.0 | 3 | 2.17 | 200 | 16.17 | 19.00 | N.O. | FLP | 1 1/2 | 2 | 2-10VDC | 24VAC/VDC | B238 | ARB24-SR | N/A | B238+ARB24-SR |
| 28 | VAV AHU PHW 26 | VAV AHU | PHW | AH-12 PHW | Belimo | 1 | CCV | 2-WAY | 26.0 | 3 | 1.87 | 200 | 15.01 | 19.00 | N.O. | FLP | 1 1/2 | 2 | 2-10VDC | 24VAC/VDC | B238 | ARB24-SR | N/A | B238+ARB24-SR |
| 29 | VAV AHU PHW 20 | VAV AHU | PHW | AH-13 PHW | Belimo | 1 | CCV | 3-WAY | 20.0 | 3 | 1.11 | 200 | 11.55 | 19.00 | N.O. | FLP | 1 1/2 | 2 | 2-10VDC | 24VAC/VDC | B338 | ARB24-SR | N/A | B338+ARB24-SR |
| 30 | VAV AHU PHW 18 | VAV AHU | PHW | AH-14 PHW | Belimo | 1 | CCV | 2-WAY | 18.0 | 3 | 0.90 | 200 | 10.39 | 19.00 | N.O. | FLP | 1 1/2 | 2 | 2-10VDC | 24VAC/VDC | B238 | ARB24-SR | N/A | B238+ARB24-SR |
| 31 | SZ AHU RHW 11 | SZ AHU | RHW | AH-2 RHW | Belimo | 1 | CCV | 2-WAY | 11.0 | 3 | 1.21 | 200 | 6.35 | 10.00 | N.C. | FLP | 1 1/4 | 1 1/2 | 2-10VDC | 24VAC/VDC | B229 | LRB24-SR | N/A | B229+LRB24-SR |
| 32 | SZ AHU RHW 31 | SZ AHU | RHW | AH-4 RHW | Belimo | 1 | CCV | 2-WAY | 31.0 | 3 | 2.66 | 200 | 17.90 | 19.00 | N.C. | FLP | 1 1/2 | 2 | 2-10VDC | 24VAC/VDC | B238 | ARB24-SR | N/A | B238+ARB24-SR |
| 33 | SZ AHU RHW 33 | SZ AHU | RHW | AH-5 RHW | Belimo | 1 | CCV | 2-WAY | 33.0 | 3 | 1.29 | 200 | 19.05 | 29.00 | N.C. | FLP | 1 1/2 | 2 | 2-10VDC | 24VAC/VDC | B239 | ARB24-SR | N/A | B239+ARB24-SR |
| 34 | SZ AHU RHW 22 | SZ AHU | RHW | AH-6 RHW | Belimo | 1 | CCV | 2-WAY | 22.0 | 3 | 1.34 | 200 | 12.70 | 19.00 | N.C. | FLP | 1 1/2 | 2 | 2-10VDC | 24VAC/VDC | B238 | ARB24-SR | N/A | B238+ARB24-SR |

**** Indicates valves requested to be sized up one step per Wallis Engineering Group***

Valve Schedule pg.1

DWG # 1.1.1

JOB # WWPW

NISD Village at West Pointe West ES

San Antonio, TX

| REV # | DATE | DESCRIPTION |
|---|---|---|
| 2 | 8/31/2023 | Revision 2 per Mech Changes |
| 1 | 8/11/2023 | Revision 1 |
| 0 | 4/28/2023 | SUBMITTED |

Drawn:

ENG: Dennis Schnellman

Yates Co
4738 Whirlwind Dr.
San Antonio, TX 78217
Phone: 2107023820

## SA230015C NISD Village at West Pointe West ES - Valve Schedule Rev2 08312023

| Item | General Tag | Equipment Type | Service | Specific Valve Tag | Mfg | Quantity | Valve Type | Valve Config | Flow (gpm) | DP Max Design (psi) | DP Actual (psi) | Close Off (psi) | Req'd Min Cv | Valve Cv | Normal Position (2 VDC) | Fail Position | Valve Size (in.) | Line Size (in.) | Control Signal | Voltage | Valve Part # | Actuator Part # | Clip Position | Valve Assembly Part Number |
|---|---|---|---|---|---|---|---|---|---|---|---|---|---|---|---|---|---|---|---|---|---|---|---|---|
| 35 | FPB HW 4 | FPB | HW | F-3A | Belimo | 1 | QCV | 2-WAY | 4.0 | 3 | 1.47 | 200 | 2.31 | 3.30 | N.C. | FLP | 3/4 | 1 | Open/Close | 24VAC/VDC | Z2075Q-K | CQX24-3 | 5 | Z2075Q-K+CQX24-3 |
| 36 | FPB HW 2.5 | FPB | HW | F-3B | Belimo | 1 | QCV | 3-WAY | 2.5 | 3 | 0.86 | 200 | 1.44 | 2.70 | N.C. | FLP | 1/2 | 3/4 | Open/Close | 24VAC/VDC | Z3050Q-H | CQB24-3 | N/A | Z3050Q-H+CQB24-3 |
| 37 | FPB HW 4.5 | FPB | HW | F-3C | Belimo | 1 | QCV | 2-WAY | 4.5 | 3 | 1.86 | 200 | 2.60 | 3.30 | N.C. | FLP | 3/4 | 1 | Open/Close | 24VAC/VDC | Z2075Q-K | CQX24-3 | 5 | Z2075Q-K+CQX24-3 |
| 38 | FPB HW 1.5 | FPB | HW | F-7A | Belimo | 1 | QCV | 2-WAY | 1.5 | 3 | 1.56 | 200 | 0.87 | 1.20 | N.C. | FLP | 1/2 | 3/4 | Open/Close | 24VAC/VDC | Z2050Q-F | CQX24-3 | N | Z2050Q-F+CQX24-3 |
| 39 | FPB HW 1.5 | FPB | HW | F-7B | Belimo | 1 | QCV | 2-WAY | 1.5 | 3 | 1.56 | 200 | 0.87 | 1.20 | N.C. | FLP | 1/2 | 3/4 | Open/Close | 24VAC/VDC | Z2050Q-F | CQX24-3 | N | Z2050Q-F+CQX24-3 |
| 40 | FPB HW 2 | FPB | HW | F-7C | Belimo | 1 | QCV | 2-WAY | 2.0 | 3 | 2.78 | 200 | 1.15 | 1.20 | N.C. | FLP | 1/2 | 3/4 | Open/Close | 24VAC/VDC | Z2050Q-F | CQX24-3 | N | Z2050Q-F+CQX24-3 |
| 41 | FPB HW 2 | FPB | HW | F-7D | Belimo | 1 | QCV | 2-WAY | 2.0 | 3 | 2.78 | 200 | 1.15 | 1.20 | N.C. | FLP | 1/2 | 3/4 | Open/Close | 24VAC/VDC | Z2050Q-F | CQX24-3 | N | Z2050Q-F+CQX24-3 |
| 42 | FPB HW 1.5 | FPB | HW | F-7E | Belimo | 1 | QCV | 2-WAY | 1.5 | 3 | 1.56 | 200 | 0.87 | 1.20 | N.C. | FLP | 1/2 | 3/4 | Open/Close | 24VAC/VDC | Z2050Q-F | CQX24-3 | N | Z2050Q-F+CQX24-3 |
| 43 | FPB HW 1.5 | FPB | HW | F-7F | Belimo | 1 | QCV | 2-WAY | 1.5 | 3 | 1.56 | 200 | 0.87 | 1.20 | N.C. | FLP | 1/2 | 3/4 | Open/Close | 24VAC/VDC | Z2050Q-F | CQX24-3 | N | Z2050Q-F+CQX24-3 |
| 44 | FPB HW 4 | FPB | HW | F-7G | Belimo | 1 | QCV | 2-WAY | 4 | 3 | 1.47 | 200 | 2.31 | 3.30 | N.C. | FLP | 3/4 | 1 | Open/Close | 24VAC/VDC | Z2075Q-K | CQX24-3 | 5 | Z2075Q-K+CQX24-3 |
| 45 | FPB HW 2.5 | FPB | HW | F-7H | Belimo | 1 | QCV | 2-WAY | 2.5 | 3 | 2.16 | 200 | 1.44 | 1.70 | N.C. | FLP | 1/2 | 3/4 | Open/Close | 24VAC/VDC | Z2050Q-J | CQX24-3 | 4 | Z2050Q-J+CQX24-3 |
| 46 | FPB HW 1.5 | FPB | HW | F-7J | Belimo | 1 | QCV | 2-WAY | 1.5 | 3 | 1.56 | 200 | 0.87 | 1.20 | N.C. | FLP | 1/2 | 3/4 | Open/Close | 24VAC/VDC | Z2050Q-F | CQX24-3 | N | Z2050Q-F+CQX24-3 |
| 47 | FPB HW 3.5 | FPB | HW | F-8A | Belimo | 1 | QCV | 2-WAY | 3.5 | 3 | 2.13 | 200 | 2.02 | 2.40 | N.C. | FLP | 1/2 | 3/4 | Open/Close | 24VAC/VDC | Z2050Q-J | CQX24-3 | 5 | Z2050Q-J+CQX24-3 |
| 48 | FPB HW 3.5 | FPB | HW | F-8B | Belimo | 1 | QCV | 3-WAY | 3.5 | 3 | 1.68 | 200 | 2.02 | 2.70 | N.C. | FLP | 1/2 | 3/4 | Open/Close | 24VAC/VDC | Z3050Q-H | CQB24-3 | N/A | Z3050Q-H+CQB24-3 |
| 49 | FPB HW 2.5 | FPB | HW | F-8C | Belimo | 1 | QCV | 2-WAY | 2.5 | 3 | 2.16 | 200 | 1.44 | 1.70 | N.C. | FLP | 1/2 | 3/4 | Open/Close | 24VAC/VDC | Z2050Q-J | CQX24-3 | 4 | Z2050Q-J+CQX24-3 |
| 50 | FPB HW 1.5 | FPB | HW | F-8D | Belimo | 1 | QCV | 2-WAY | 1.5 | 3 | 1.56 | 200 | 0.87 | 1.20 | N.C. | FLP | 1/2 | 3/4 | Open/Close | 24VAC/VDC | Z2050Q-F | CQX24-3 | N | Z2050Q-F+CQX24-3 |
| 51 | FPB HW 1.5 | FPB | HW | F-8E | Belimo | 1 | QCV | 2-WAY | 1.5 | 3 | 1.56 | 200 | 0.87 | 1.20 | N.C. | FLP | 1/2 | 3/4 | Open/Close | 24VAC/VDC | Z2050Q-F | CQX24-3 | N | Z2050Q-F+CQX24-3 |
| 52 | FPB HW 4.5 | FPB | HW | F-9A | Belimo | 1 | QCV | 3-WAY | 4.5 | 3 | 0.96 | 200 | 2.60 | 4.60 | N.C. | FLP | 3/4 | 1 | Open/Close | 24VAC/VDC | Z3075Q-J | CQB24-3 | N/A | Z3075Q-J+CQB24-3 |
| 53 | FPB HW 3.5 | FPB | HW | F-9B | Belimo | 1 | QCV | 2-WAY | 3.5 | 3 | 2.13 | 200 | 2.02 | 2.40 | N.C. | FLP | 1/2 | 3/4 | Open/Close | 24VAC/VDC | Z2050Q-J | CQX24-3 | 5 | Z2050Q-J+CQX24-3 |
| 54 | FPB HW 4 | FPB | HW | F-9C | Belimo | 1 | QCV | 2-WAY | 4 | 3 | 1.47 | 200 | 2.31 | 3.30 | N.C. | FLP | 3/4 | 1 | Open/Close | 24VAC/VDC | Z2075Q-K | CQX24-3 | 5 | Z2075Q-K+CQX24-3 |
| 55 | FPB HW 3.5 | FPB | HW | F-9D | Belimo | 1 | QCV | 3-WAY | 3.5 | 3 | 1.68 | 200 | 2.02 | 2.70 | N.C. | FLP | 1/2 | 3/4 | Open/Close | 24VAC/VDC | Z3050Q-H | CQB24-3 | N/A | Z3050Q-H+CQB24-3 |
| 56 | FPB HW 2 | FPB | HW | F-9E | Belimo | 1 | QCV | 2-WAY | 2 | 3 | 2.78 | 200 | 1.15 | 1.20 | N.C. | FLP | 1/2 | 3/4 | Open/Close | 24VAC/VDC | Z2050Q-F | CQX24-3 | N | Z2050Q-F+CQX24-3 |
| 57 | FPB HW 4 | FPB | HW | F-9F | Belimo | 1 | QCV | 2-WAY | 4 | 3 | 1.47 | 200 | 2.31 | 3.30 | N.C. | FLP | 3/4 | 1 | Open/Close | 24VAC/VDC | Z2075Q-J | CQX24-3 | 5 | Z2075Q-J+CQX24-3 |
| 58 | FPB HW 3.5 | FPB | HW | F-9G | Belimo | 1 | QCV | 2-WAY | 3.5 | 3 | 2.13 | 200 | 2.02 | 2.40 | N.C. | FLP | 1/2 | 3/4 | Open/Close | 24VAC/VDC | Z2050Q-J | CQX24-3 | 5 | Z2050Q-J+CQX24-3 |
| 59 | FPB HW 3 | FPB | HW | F-9H | Belimo | 1 | QCV | 3-WAY | 3 | 3 | 1.23 | 200 | 1.73 | 2.70 | N.C. | FLP | 1/2 | 3/4 | Open/Close | 24VAC/VDC | Z3050Q-H | CQB24-3 | N/A | Z3050Q-H+CQB24-3 |
| 60 | FPB HW 3 | FPB | HW | F-9J | Belimo | 1 | QCV | 2-WAY | 3 | 3 | 1.56 | 200 | 1.73 | 2.40 | N.C. | FLP | 1/2 | 3/4 | Open/Close | 24VAC/VDC | Z2050Q-J | CQX24-3 | 5 | Z2050Q-J+CQX24-3 |
| 61 | FPB HW 3 | FPB | HW | F-9K | Belimo | 1 | QCV | 2-WAY | 3 | 3 | 1.56 | 200 | 1.73 | 2.40 | N.C. | FLP | 1/2 | 3/4 | Open/Close | 24VAC/VDC | Z2050Q-J | CQX24-3 | 5 | Z2050Q-J+CQX24-3 |
| 62 | FPB HW 3 | FPB | HW | F-10A | Belimo | 1 | QCV | 3-WAY | 3 | 3 | 1.23 | 200 | 1.73 | 2.70 | N.C. | FLP | 1/2 | 3/4 | Open/Close | 24VAC/VDC | Z3050Q-H | CQB24-3 | N/A | Z3050Q-H+CQB24-3 |
| 63 | FPB HW 3.5 | FPB | HW | F-10B | Belimo | 1 | QCV | 2-WAY | 3.5 | 3 | 2.13 | 200 | 2.02 | 2.40 | N.C. | FLP | 1/2 | 3/4 | Open/Close | 24VAC/VDC | Z2050Q-J | CQX24-3 | 5 | Z2050Q-J+CQX24-3 |
| 64 | FPB HW 1.5 | FPB | HW | F-10C | Belimo | 1 | QCV | 2-WAY | 1.5 | 3 | 1.56 | 200 | 0.87 | 1.20 | N.C. | FLP | 1/2 | 3/4 | Open/Close | 24VAC/VDC | Z2050Q-F | CQX24-3 | N | Z2050Q-F+CQX24-3 |
| 65 | FPB HW 3 | FPB | HW | F-10D | Belimo | 1 | QCV | 2-WAY | 3 | 3 | 1.56 | 200 | 1.73 | 2.40 | N.C. | FLP | 1/2 | 3/4 | Open/Close | 24VAC/VDC | Z2050Q-J | CQX24-3 | 5 | Z2050Q-J+CQX24-3 |
| 66 | FPB HW 3 | FPB | HW | F-10E | Belimo | 1 | QCV | 2-WAY | 3 | 3 | 1.56 | 200 | 1.73 | 2.40 | N.C. | FLP | 1/2 | 3/4 | Open/Close | 24VAC/VDC | Z2050Q-J | CQX24-3 | 5 | Z2050Q-J+CQX24-3 |
| 67 | FPB HW 3 | FPB | HW | F-10F | Belimo | 1 | QCV | 2-WAY | 3 | 3 | 1.56 | 200 | 1.73 | 2.40 | N.C. | FLP | 1/2 | 3/4 | Open/Close | 24VAC/VDC | Z2050Q-J | CQX24-3 | 5 | Z2050Q-J+CQX24-3 |
| 68 | FPB HW 3.5 | FPB | HW | F-10G | Belimo | 1 | QCV | 2-WAY | 3.5 | 3 | 2.13 | 200 | 2.02 | 2.40 | N.C. | FLP | 1/2 | 3/4 | Open/Close | 24VAC/VDC | Z2050Q-J | CQX24-3 | 5 | Z2050Q-J+CQX24-3 |
| 69 | FPB HW 3 | FPB | HW | F-10H | Belimo | 1 | QCV | 2-WAY | 3 | 3 | 1.56 | 200 | 1.73 | 2.40 | N.C. | FLP | 1/2 | 3/4 | Open/Close | 24VAC/VDC | Z2050Q-J | CQX24-3 | 5 | Z2050Q-J+CQX24-3 |
| 70 | FPB HW 3.5 | FPB | HW | F-10J | Belimo | 1 | QCV | 2-WAY | 3.5 | 3 | 2.13 | 200 | 2.02 | 2.40 | N.C. | FLP | 1/2 | 3/4 | Open/Close | 24VAC/VDC | Z2050Q-J | CQX24-3 | 5 | Z2050Q-J+CQX24-3 |
| 71 | FPB HW 4 | FPB | HW | F-10K | Belimo | 1 | QCV | 2-WAY | 4 | 3 | 1.47 | 200 | 2.31 | 3.30 | N.C. | FLP | 3/4 | 1 | Open/Close | 24VAC/VDC | Z2075Q-K | CQX24-3 | 5 | Z2075Q-K+CQX24-3 |
| 72 | FPB HW 3 | FPB | HW | F-10L | Belimo | 1 | QCV | 2-WAY | 3 | 3 | 1.56 | 200 | 1.73 | 2.40 | N.C. | FLP | 1/2 | 3/4 | Open/Close | 24VAC/VDC | Z2050Q-J | CQX24-3 | 5 | Z2050Q-J+CQX24-3 |
| 73 | FPB HW 2 | FPB | HW | F-11A | Belimo | 1 | QCV | 2-WAY | 2 | 3 | 2.78 | 200 | 1.15 | 1.20 | N.C. | FLP | 1/2 | 3/4 | Open/Close | 24VAC/VDC | Z2050Q-F | CQX24-3 | N | Z2050Q-F+CQX24-3 |
| 74 | FPB HW 3 | FPB | HW | F-11B | Belimo | 1 | QCV | 2-WAY | 3 | 3 | 1.56 | 200 | 1.73 | 2.40 | N.C. | FLP | 1/2 | 3/4 | Open/Close | 24VAC/VDC | Z2050Q-J | CQX24-3 | 5 | Z2050Q-J+CQX24-3 |
| 75 | FPB HW 3 | FPB | HW | F-11C | Belimo | 1 | QCV | 2-WAY | 3 | 3 | 1.56 | 200 | 1.73 | 2.40 | N.C. | FLP | 1/2 | 3/4 | Open/Close | 24VAC/VDC | Z2050Q-J | CQX24-3 | 5 | Z2050Q-J+CQX24-3 |
| 76 | FPB HW 3 | FPB | HW | F-11D | Belimo | 1 | QCV | 2-WAY | 3 | 3 | 1.56 | 200 | 1.73 | 2.40 | N.C. | FLP | 1/2 | 3/4 | Open/Close | 24VAC/VDC | Z2050Q-J | CQX24-3 | 5 | Z2050Q-J+CQX24-3 |
| 77 | FPB HW 3.5 | FPB | HW | F-11E | Belimo | 1 | QCV | 2-WAY | 3.5 | 3 | 2.13 | 200 | 2.02 | 2.40 | N.C. | FLP | 1/2 | 3/4 | Open/Close | 24VAC/VDC | Z2050Q-J | CQX24-3 | 5 | Z2050Q-J+CQX24-3 |
| 78 | FPB HW 3 | FPB | HW | F-11F | Belimo | 1 | QCV | 2-WAY | 3 | 3 | 1.56 | 200 | 1.73 | 2.40 | N.C. | FLP | 1/2 | 3/4 | Open/Close | 24VAC/VDC | Z2050Q-J | CQX24-3 | 5 | Z2050Q-J+CQX24-3 |
| 79 | FPB HW 3 | FPB | HW | F-11G | Belimo | 1 | QCV | 2-WAY | 3 | 3 | 1.56 | 200 | 1.73 | 2.40 | N.C. | FLP | 1/2 | 3/4 | Open/Close | 24VAC/VDC | Z2050Q-J | CQX24-3 | 5 | Z2050Q-J+CQX24-3 |
| 80 | FPB HW 3 | FPB | HW | F-11H | Belimo | 1 | QCV | 2-WAY | 3 | 3 | 1.56 | 200 | 1.73 | 2.40 | N.C. | FLP | 1/2 | 3/4 | Open/Close | 24VAC/VDC | Z2050Q-J | CQX24-3 | 5 | Z2050Q-J+CQX24-3 |
| 81 | FPB HW 3 | FPB | HW | F-11J | Belimo | 1 | QCV | 2-WAY | 3 | 3 | 1.56 | 200 | 1.73 | 2.40 | N.C. | FLP | 1/2 | 3/4 | Open/Close | 24VAC/VDC | Z2050Q-J | CQX24-3 | 5 | Z2050Q-J+CQX24-3 |
| 82 | FPB HW 3 | FPB | HW | F-11K | Belimo | 1 | QCV | 2-WAY | 3 | 3 | 1.56 | 200 | 1.73 | 2.40 | N.C. | FLP | 1/2 | 3/4 | Open/Close | 24VAC/VDC | Z2050Q-J | CQX24-3 | 5 | Z2050Q-J+CQX24-3 |
| 83 | FPB HW 3 | FPB | HW | F-11L | Belimo | 1 | QCV | 2-WAY | 3 | 3 | 1.56 | 200 | 1.73 | 2.40 | N.C. | FLP | 1/2 | 3/4 | Open/Close | 24VAC/VDC | Z2050Q-J | CQX24-3 | 5 | Z2050Q-J+CQX24-3 |
| 84 | FPB HW 3.5 | FPB | HW | F-11M | Belimo | 1 | QCV | 2-WAY | 3.5 | 3 | 2.32 | 200 | 2.02 | 2.30 | N.C. | FLP | 3/4 | 1 | Open/Close | 24VAC/VDC | Z2075Q-K | CQX24-3 | 4 | Z2075Q-K+CQX24-3 |
| 85 | FPB HW 3 | FPB | HW | F-12A | Belimo | 1 | QCV | 2-WAY | 3 | 3 | 1.56 | 200 | 1.73 | 2.40 | N.C. | FLP | 1/2 | 3/4 | Open/Close | 24VAC/VDC | Z2050Q-J | CQX24-3 | 5 | Z2050Q-J+CQX24-3 |
| 86 | FPB HW 3 | FPB | HW | F-12B | Belimo | 1 | QCV | 2-WAY | 3 | 3 | 1.56 | 200 | 1.73 | 2.40 | N.C. | FLP | 1/2 | 3/4 | Open/Close | 24VAC/VDC | Z2050Q-J | CQX24-3 | 5 | Z2050Q-J+CQX24-3 |
| 87 | FPB HW 3 | FPB | HW | F-12C | Belimo | 1 | QCV | 3-WAY | 3 | 3 | 1.23 | 200 | 1.73 | 2.70 | N.C. | FLP | 1/2 | 3/4 | Open/Close | 24VAC/VDC | Z3050Q-H | CQB24-3 | N/A | Z3050Q-H+CQB24-3 |
| 88 | FPB HW 3 | FPB | HW | F-12D | Belimo | 1 | QCV | 2-WAY | 3 | 3 | 1.56 | 200 | 1.73 | 2.40 | N.C. | FLP | 1/2 | 3/4 | Open/Close | 24VAC/VDC | Z2050Q-J | CQX24-3 | 5 | Z2050Q-J+CQX24-3 |
| 89 | FPB HW 3 | FPB | HW | F-12E | Belimo | 1 | QCV | 2-WAY | 3 | 3 | 1.56 | 200 | 1.73 | 2.40 | N.C. | FLP | 1/2 | 3/4 | Open/Close | 24VAC/VDC | Z2050Q-J | CQX24-3 | 5 | Z2050Q-J+CQX24-3 |
| 90 | FPB HW 3 | FPB | HW | F-12F | Belimo | 1 | QCV | 2-WAY | 3 | 3 | 1.56 | 200 | 1.73 | 2.40 | N.C. | FLP | 1/2 | 3/4 | Open/Close | 24VAC/VDC | Z2050Q-J | CQX24-3 | 5 | Z2050Q-J+CQX24-3 |
| 91 | FPB HW 4 | FPB | HW | F-12G | Belimo | 1 | QCV | 2-WAY | 4 | 3 | 1.47 | 200 | 2.31 | 3.30 | N.C. | FLP | 3/4 | 1 | Open/Close | 24VAC/VDC | Z2075Q-K | CQX24-3 | 5 | Z2075Q-K+CQX24-3 |
| 92 | FPB HW 3 | FPB | HW | F-12H | Belimo | 1 | QCV | 2-WAY | 3 | 3 | 1.56 | 200 | 1.73 | 2.40 | N.C. | FLP | 1/2 | 3/4 | Open/Close | 24VAC/VDC | Z2050Q-J | CQX24-3 | 5 | Z2050Q-J+CQX24-3 |
| 93 | FPB HW 3 | FPB | HW | F-12J | Belimo | 1 | QCV | 2-WAY | 3 | 3 | 1.56 | 200 | 1.73 | 2.40 | N.C. | FLP | 1/2 | 3/4 | Open/Close | 24VAC/VDC | Z2050Q-J | CQX24-3 | 5 | Z2050Q-J+CQX24-3 |
| 94 | FPB HW 3 | FPB | HW | F-12K | Belimo | 1 | QCV | 2-WAY | 3 | 3 | 1.56 | 200 | 1.73 | 2.40 | N.C. | FLP | 1/2 | 3/4 | Open/Close | 24VAC/VDC | Z2050Q-J | CQX24-3 | 5 | Z2050Q-J+CQX24-3 |
| 95 | FPB HW 3.5 | FPB | HW | F-12L | Belimo | 1 | QCV | 2-WAY | 3.5 | 3 | 2.13 | 200 | 2.02 | 2.40 | N.C. | FLP | 1/2 | 3/4 | Open/Close | 24VAC/VDC | Z2050Q-J | CQX24-3 | 5 | Z2050Q-J+CQX24-3 |
| 96 | FPB HW 3 | FPB | HW | F-13A | Belimo | 1 | QCV | 2-WAY | 3 | 3 | 1.56 | 200 | 1.73 | 2.40 | N.C. | FLP | 1/2 | 3/4 | Open/Close | 24VAC/VDC | Z2050Q-J | CQX24-3 | 5 | Z2050Q-J+CQX24-3 |
| 97 | FPB HW 3.5 | FPB | HW | F-13B | Belimo | 1 | QCV | 2-WAY | 3.5 | 3 | 1.12 | 200 | 2.02 | 3.30 | N.C. | FLP | 3/4 | 1 | Open/Close | 24VAC/VDC | Z2075Q-K | CQX24-3 | 5 | Z2075Q-K+CQX24-3 |
| 98 | FPB HW 3 | FPB | HW | F-13C | Belimo | 1 | QCV | 2-WAY | 3 | 3 | 1.56 | 200 | 1.73 | 2.40 | N.C. | FLP | 1/2 | 3/4 | Open/Close | 24VAC/VDC | Z2050Q-J | CQX24-3 | 5 | Z2050Q-J+CQX24-3 |
| 99 | FPB HW 3 | FPB | HW | F-13D | Belimo | 1 | QCV | 2-WAY | 3 | 3 | 1.56 | 200 | 1.73 | 2.40 | N.C. | FLP | 1/2 | 3/4 | Open/Close | 24VAC/VDC | Z2050Q-J | CQX24-3 | 5 | Z2050Q-J+CQX24-3 |
| 100 | FPB HW 3 | FPB | HW | F-13E | Belimo | 1 | QCV | 2-WAY | 3 | 3 | 1.56 | 200 | 1.73 | 2.40 | N.C. | FLP | 1/2 | 3/4 | Open/Close | 24VAC/VDC | Z2050Q-J | CQX24-3 | 5 | Z2050Q-J+CQX24-3 |
| 101 | FPB HW 3.5 | FPB | HW | F-13F | Belimo | 1 | QCV | 2-WAY | 3.5 | 3 | 1.12 | 200 | 2.02 | 3.30 | N.C. | FLP | 3/4 | 1 | Open/Close | 24VAC/VDC | Z2075Q-K | CQX24-3 | 5 | Z2075Q-K+CQX24-3 |
| 102 | FPB HW 3.5 | FPB | HW | F-13G | Belimo | 1 | QCV | 2-WAY | 3.5 | 3 | 2.13 | 200 | 2.02 | 2.40 | N.C. | FLP | 1/2 | 3/4 | Open/Close | 24VAC/VDC | Z2050Q-J | CQX24-3 | 5 | Z2050Q-J+CQX24-3 |
| 103 | FPB HW 3.5 | FPB | HW | F-13H | Belimo | 1 | QCV | 2-WAY | 3.5 | 3 | 2.13 | 200 | 2.02 | 2.40 | N.C. | FLP | 1/2 | 3/4 | Open/Close | 24VAC/VDC | Z2050Q-J | CQX24-3 | 5 | Z2050Q-J+CQX24-3 |
| 104 | FPB HW 3 | FPB | HW | F-14A | Belimo | 1 | QCV | 2-WAY | 3 | 3 | 1.56 | 200 | 1.73 | 2.40 | N.C. | FLP | 1/2 | 3/4 | Open/Close | 24VAC/VDC | Z2050Q-J | CQX24-3 | 5 | Z2050Q-J+CQX24-3 |
| 105 | FPB HW 3 | FPB | HW | F-14B | Belimo | 1 | QCV | 3-WAY | 3 | 3 | 1.23 | 200 | 1.73 | 2.70 | N.C. | FLP | 1/2 | 3/4 | Open/Close | 24VAC/VDC | Z3050Q-H | CQB24-3 | N/A | Z3050Q-H+CQB24-3 |
| 106 | FPB HW 3 | FPB | HW | F-14C | Belimo | 1 | QCV | 2-WAY | 3 | 3 | 1.56 | 200 | 1.73 | 2.40 | N.C. | FLP | 1/2 | 3/4 | Open/Close | 24VAC/VDC | Z2050Q-J | CQX24-3 | 5 | Z2050Q-J+CQX24-3 |
| 107 | FPB HW 3 | FPB | HW | F-14D | Belimo | 1 | QCV | 2-WAY | 3 | 3 | 1.56 | 200 | 1.73 | 2.40 | N.C. | FLP | 1/2 | 3/4 | Open/Close | 24VAC/VDC | Z2050Q-J | CQX24-3 | 5 | Z2050Q-J+CQX24-3 |
| 108 | FPB HW 3 | FPB | HW | F-14E | Belimo | 1 | QCV | 2-WAY | 3 | 3 | 1.56 | 200 | 1.73 | 2.40 | N.C. | FLP | 1/2 | 3/4 | Open/Close | 24VAC/VDC | Z2050Q-J | CQX24-3 | 5 | Z2050Q-J+CQX24-3 |
| 109 | FPB HW 3 | FPB | HW | F-14F | Belimo | 1 | QCV | 2-WAY | 3 | 3 | 1.56 | 200 | 1.73 | 2.40 | N.C. | FLP | 1/2 | 3/4 | Open/Close | 24VAC/VDC | Z2050Q-J | CQX24-3 | 5 | Z2050Q-J+CQX24-3 |
| 110 | FPB HW 4.5 | FPB | HW | F-14G | Belimo | 1 | QCV | 2-WAY | 4.5 | 3 | 1.86 | 200 | 2.60 | 3.30 | N.C. | FLP | 3/4 | 1 | Open/Close | 24VAC/VDC | Z2075Q-J | CQX24-3 | 5 | Z2075Q-J+CQX24-3 |
| 111 | UH HW 9 | UH | HW | UH-1A | Belimo | 1 | CCV | 2-WAY | 9 | 3 | 0.81 | 200 | 5.20 | 10.00 | N.C. | FLP | 1 1/4 | 1 1/2 | Open/Close | 24VAC/VDC | B229 | LRB24-3 | N/A | B229+LRB24-3 |
| 112 | UH HW 9 | UH | HW | UH-1B | Belimo | 1 | CCV | 2-WAY | 9 | 3 | 0.81 | 200 | 5.20 | 10.00 | N.C. | FLP | 1 1/4 | 1 1/2 | Open/Close | 24VAC/VDC | B229 | LRB24-3 | N/A | B229+LRB24-3 |

**** Indicates valves requested to be sized up one step per Wallis Engineering Group***

Valve Schedule pg.2

DWG # 1.1.2

JOB # VWPW

NISD Village at West Pointe West ES

San Antonio, TX

| REV # | DESCRIPTION | DATE |
|---|---|---|
| 2 | Revision 2 per Mech Changes | 8/31/2023 |
| 1 | Revision 1 | 8/11/2023 |
| 0 | SUBMITTED | 4/28/2023 |

Drawn: ENG: Dennis Schnellman

Yates Co
4738 Whirlwind Dr.
San Antonio, TX 78217
Phone: 2107023820

(Confirm provision, damper sizes, and quantities with mechanical contractor)

## SA230015C NISD Village at West Pointe West ES - Damper Schedule

| Item | Designation | Serves | Function | Type | Qty | Width/ Diameter (in) | Heigth (in) | Damper | Actuator | Req. Torque | Act. Torque | Power Source | Fail Safe | Control |
|---|---|---|---|---|---|---|---|---|---|---|---|---|---|---|
| 1 | RV-1 Relief | RV-1 | Relief | Parallel w/ seal | 1 | 36 | 42 | CD46-36x42 | NFB24-SR | 73.5 in-lbs | 90 in-lbs | 24VAC/DC | Spring | 2-10VDC |
| 2 | RV-2 Relief | RV-2 | Relief | Parallel w/ seal | 1 | 30 | 30 | CD46-30x30 | NFB24-SR | 43.8 in-lbs | 90 in-lbs | 24VAC/DC | Spring | 2-10VDC |
| 3 | RV-3 Relief | RV-3 | Relief | Parallel w/ seal | 1 | 30 | 36 | CD46-30x36 | NFB24-SR | 52.5 in-lbs | 90 in-lbs | 24VAC/DC | Spring | 2-10VDC |
| 4 | RV-4 Relief | RV-4 | Relief | Parallel w/ seal | 1 | 48 | 48 | CD46-48x48 | AFB24-SR | 112 in-lbs | 180 in-lbs | 24VAC/DC | Spring | 2-10VDC |
| 5 | RV-5 Relief | RV-5 | Relief | Parallel w/ seal | 1 | 48 | 54 | CD46-48x54 | AFB24-SR | 126 in-lbs | 180 in-lbs | 24VAC/DC | Spring | 2-10VDC |
| 6 | RV-6 Relief | RV-6 | Relief | Parallel w/ seal | 1 | 42 | 42 | CD46-42x42 | AFB24-SR | 85.8 in-lbs | 180 in-lbs | 24VAC/DC | Spring | 2-10VDC |
| 7 | RV-7 Relief | RV-7 | Relief | Parallel w/ seal | 1 | 36 | 42 | CD46-36x42 | NFB24-SR | 73.5 in-lbs | 90 in-lbs | 24VAC/DC | Spring | 2-10VDC |
| 8 | RV-8 Relief | RV-8 | Relief | Parallel w/ seal | 1 | 30 | 42 | CD46-30x42 | NFB24-SR | 61.3 in-lbs | 90 in-lbs | 24VAC/DC | Spring | 2-10VDC |
| 9 | RV-9 Relief | RV-9 | Relief | Parallel w/ seal | 1 | 48 | 66 | CD46-48x66 | AFB24-SR | 154 in-lbs | 180 in-lbs | 24VAC/DC | Spring | 2-10VDC |
| 10 | RV-10A Relief | RV-10A | Relief | Parallel w/ seal | 1 | 36 | 42 | CD46-36x42 | NFB24-SR | 73.5 in-lbs | 90 in-lbs | 24VAC/DC | Spring | 2-10VDC |
| 11 | RV-10B Relief | RV-10B | Relief | Parallel w/ seal | 1 | 36 | 42 | CD46-36x42 | NFB24-SR | 73.5 in-lbs | 90 in-lbs | 24VAC/DC | Spring | 2-10VDC |
| 12 | RV-11 Relief | RV-11 | Relief | Parallel w/ seal | 1 | 48 | 72 | CD46-48x72 | AFB24-SR | 168 in-lbs | 180 in-lbs | 24VAC/DC | Spring | 2-10VDC |
| 13 | RV-12A Relief | RV-12A | Relief | Parallel w/ seal | 1 | 48 | 48 | CD46-48x48 | AFB24-SR | 112 in-lbs | 180 in-lbs | 24VAC/DC | Spring | 2-10VDC |
| 14 | RV-12B Relief | RV-12B | Relief | Parallel w/ seal | 1 | 30 | 36 | CD46-30x36 | NFB24-SR | 52.5 in-lbs | 90 in-lbs | 24VAC/DC | Spring | 2-10VDC |
| 15 | RV-13 Relief | RV-13 | Relief | Parallel w/ seal | 1 | 48 | 54 | CD46-48x54 | AFB24-SR | 126 in-lbs | 180 in-lbs | 24VAC/DC | Spring | 2-10VDC |
| 16 | RV-14 Relief | RV-14 | Relief | Parallel w/ seal | 1 | 48 | 54 | CD46-48x54 | AFB24-SR | 126 in-lbs | 180 in-lbs | 24VAC/DC | Spring | 2-10VDC |
| 17 | AH-1 OA | AH-1 | OA | Opposed w/ seal | 1 | 18 | 62 | CD46-18x62 | NFB24-SR | 54.3 in-lbs | 90 in-lbs | 24VAC/DC | Spring | 2-10VDC |
| 18 | AH-2 OA | AH-2 | OA | Opposed w/ seal | 1 | 14 | 50 | CD46-14x50 | NFB24-SR | 34 in-lbs | 90 in-lbs | 24VAC/DC | Spring | 2-10VDC |
| 19 | AH-3 OA | AH-3 | OA | Opposed w/ seal | 1 | 12 | 50 | CD46-12x50 | NFB24-SR | 29.2 in-lbs | 90 in-lbs | 24VAC/DC | Spring | 2-10VDC |
| 20 | AH-4 OA | AH-4 | OA | Opposed w/ seal | 1 | 24 | 72 | CD46-24x72 | AFB24-SR | 84 in-lbs | 180 in-lbs | 24VAC/DC | Spring | 2-10VDC |
| 21 | AH-5 OA | AH-5 | OA | Opposed w/ seal | 1 | 24 | 72 | CD46-24x72 | NFB24-SR | 84 in-lbs | 90 in-lbs | 24VAC/DC | Spring | 2-10VDC |
| 22 | AH-6 OA | AH-6 | OA | Opposed w/ seal | 1 | 18 | 66 | CD46-18x66 | NFB24-SR | 57.8 in-lbs | 90 in-lbs | 24VAC/DC | Spring | 2-10VDC |
| 23 | AH-7 OA | AH-7 | OA | Opposed w/ seal | 1 | 16 | 60 | CD46-16x60 | NFB24-SR | 46.7 in-lbs | 90 in-lbs | 24VAC/DC | Spring | 2-10VDC |
| 24 | AH-8 OA | AH-8 | OA | Opposed w/ seal | 1 | 16 | 52 | CD46-16x52 | NFB24-SR | 40.4 in-lbs | 90 in-lbs | 24VAC/DC | Spring | 2-10VDC |
| 25 | AH-9 OA | AH-9 | OA | Opposed w/ seal | 1 | 48 | 60 | CD46-48x60 | AFB24-SR | 140 in-lbs | 180 in-lbs | 24VAC/DC | Spring | 2-10VDC |
| 26 | AH-10 OA | AH-10 | OA | Opposed w/ seal | 1 | 48 | 60 | CD46-48x60 | AFB24-SR | 140 in-lbs | 180 in-lbs | 24VAC/DC | Spring | 2-10VDC |
| 27 | AH-11 OA | AH-11 | OA | Opposed w/ seal | 1 | 48 | 66 | CD46-48x66 | AFB24-SR | 154 in-lbs | 180 in-lbs | 24VAC/DC | Spring | 2-10VDC |
| 28 | AH-12 OA | AH-12 | OA | Opposed w/ seal | 1 | 48 | 60 | CD46-48x60 | AFB24-SR | 140 in-lbs | 180 in-lbs | 24VAC/DC | Spring | 2-10VDC |
| 29 | AH-13 OA | AH-13 | OA | Opposed w/ seal | 1 | 24 | 72 | CD46-24x72 | AFB24-SR | 84 in-lbs | 180 in-lbs | 24VAC/DC | Spring | 2-10VDC |
| 30 | AH-14 OA | AH-14 | OA | Opposed w/ seal | 1 | 42 | 48 | CD46-42x48 | AFB24-SR | 98 in-lbs | 180 in-lbs | 24VAC/DC | Spring | 2-10VDC |
| 31 | AH-1 RA | AH-1 | RA | Opposed w/ seal | 1 | 30 | 24 | CD46-30x24 | NFB24-SR | 52.5 in-lbs | 90 in-lbs | 24VAC/DC | Spring | 2-10VDC |
| 32 | AH-2 RA | AH-2 | RA | Opposed w/ seal | 1 | 32 | 16 | CD46-32x16 | NFB24-SR | 24.9 in-lbs | 90 in-lbs | 24VAC/DC | Spring | 2-10VDC |
| 33 | AH-3 RA | AH-3 | RA | Opposed w/ seal | 1 | 26 | 24 | CD46-26x24 | NFB24-SR | 30.3 in-lbs | 90 in-lbs | 24VAC/DC | Spring | 2-10VDC |
| 34 | AH-4 RA | AH-4 | RA | Opposed w/ seal | 1 | 48 | 24 | CD46-48x24 | NFB24-SR | 56 in-lbs | 90 in-lbs | 24VAC/DC | Spring | 2-10VDC |
| 35 | AH-5 RA | AH-5 | RA | Opposed w/ seal | 1 | 44 | 24 | CD46-44x24 | NFB24-SR | 77 in-lbs | 90 in-lbs | 24VAC/DC | Spring | 2-10VDC |
| 36 | AH-6 RA | AH-6 | RA | Opposed w/ seal | 1 | 44 | 20 | CD46-44x20 | NFB24-SR | 42.8 in-lbs | 90 in-lbs | 24VAC/DC | Spring | 2-10VDC |
| 37 | AH-7 RA | AH-7 | RA | Opposed w/ seal | 1 | 36 | 20 | CD46-36x20 | NFB24-SR | 52.5 in-lbs | 90 in-lbs | 24VAC/DC | Spring | 2-10VDC |
| 38 | AH-8 RA | AH-8 | RA | Opposed w/ seal | 1 | 32 | 20 | CD46-32x20 | NFB24-SR | 31.1 in-lbs | 90 in-lbs | 24VAC/DC | Spring | 2-10VDC |
| 39 | AH-9 RA | AH-9 | RA | Opposed w/ seal | 1 | 50 | 28 | CD46-50x28 | AFB24-SR | 102.1 in-lbs | 180 in-lbs | 24VAC/DC | Spring | 2-10VDC |
| 40 | AH-10 RA | AH-10 | RA | Opposed w/ seal | 1 | 56 | 24 | CD46-56x24 | AFB24-SR | 98 in-lbs | 180 in-lbs | 24VAC/DC | Spring | 2-10VDC |
| 41 | AH-11 RA | AH-11 | RA | Opposed w/ seal | 1 | 70 | 24 | CD46-70x24 | AFB24-SR | 122.5 in-lbs | 180 in-lbs | 24VAC/DC | Spring | 2-10VDC |
| 42 | AH-12 RA | AH-12 | RA | Opposed w/ seal | 1 | 50 | 22 | CD46-50x22 | NFB24-SR | 80.2 in-lbs | 90 in-lbs | 24VAC/DC | Spring | 2-10VDC |
| 43 | AH-13 RA | AH-13 | RA | Opposed w/ seal | 1 | 50 | 22 | CD46-50x22 | NFB24-SR | 80.2 in-lbs | 90 in-lbs | 24VAC/DC | Spring | 2-10VDC |
| 44 | AH-14 RA | AH-14 | RA | Opposed w/ seal | 1 | 42 | 20 | CD46-42x20 | NFB24-SR | 61.3 in-lbs | 90 in-lbs | 24VAC/DC | Spring | 2-10VDC |
| 45 | AH-3 SA REL | AH-3 | SA REL | Parallel w/ seal | 1 | 18 | 18 | CD46-18x18 | LMX24-3 | 23.6 in-lbs | 45 in-lbs | 24VAC/DC | Last | On/Off/Floating |
| 46 | AH-7 SA REL | AH-7 | SA REL | Parallel w/ seal | 1 | 18 | 18 | CD46-18x18 | LMX24-3 | 23.6 in-lbs | 45 in-lbs | 24VAC/DC | Last | On/Off/Floating |
| 47 | AH-8 SA REL | AH-8 | SA REL | Parallel w/ seal | 1 | 18 | 18 | CD46-18x18 | LMX24-3 | 23.6 in-lbs | 45 in-lbs | 24VAC/DC | Last | On/Off/Floating |
| 48 | AH-9 SA REL | AH-9 | SA REL | Parallel w/ seal | 1 | 18 | 18 | CD46-18x18 | LMX24-3 | 31.5 in-lbs | 45 in-lbs | 24VAC/DC | Last | On/Off/Floating |
| 49 | AH-10 SA REL | AH-10 | SA REL | Parallel w/ seal | 1 | 18 | 18 | CD46-18x18 | LMX24-3 | 31.5 in-lbs | 45 in-lbs | 24VAC/DC | Last | On/Off/Floating |
| 50 | AH-11 SA REL | AH-11 | SA REL | Parallel w/ seal | 1 | 18 | 18 | CD46-18x18 | LMX24-3 | 31.5 in-lbs | 45 in-lbs | 24VAC/DC | Last | On/Off/Floating |
| 51 | AH-12 SA REL | AH-12 | SA REL | Parallel w/ seal | 1 | 18 | 18 | CD46-18x18 | LMX24-3 | 31.5 in-lbs | 45 in-lbs | 24VAC/DC | Last | On/Off/Floating |
| 52 | AH-13 SA REL | AH-13 | SA REL | Parallel w/ seal | 1 | 18 | 18 | CD46-18x18 | LMX24-3 | 31.5 in-lbs | 45 in-lbs | 24VAC/DC | Last | On/Off/Floating |
| 53 | AH-14 SA REL | AH-14 | SA REL | Parallel w/ seal | 1 | 18 | 18 | CD46-18x18 | LMX24-3 | 31.5 in-lbs | 45 in-lbs | 24VAC/DC | Last | On/Off/Floating |
| 54 | E-9A Exh | E-9A | Exh | Parallel w/ seal | 1 | 24 | 12 | CD46-24x12 | LMX24-3 | 14 in-lbs | 45 in-lbs | 24 VAC/DC | Last | On/Off/Floating |
| 55 | DH-1 SA | DH-1 | SA | Parallel w/ seal | 1 | 20 | 18 | CD46-20x18 | LMX24-3 | 17.5 in-lbs | 45 in-lbs | 24 VAC/DC | Last | On/Off/Floating |
| 56 | AH-6 SA | AH-6 | SA | Parallel w/ seal | 1 | 22 | 20 | CD46-22x20 | LMX24-3 | 32.1 in-lbs | 45 in-lbs | 24 VAC/DC | Last | On/Off/Floating |

*Indicates provided by others

Damper Schedule

DWG # 1.2.1

JOB # VWPW

NISD Village at West Pointe West ES

San Antonio, TX

Drawn:
ENG: Dennis Schnellman

| REV # | DESCRIPTION | DATE |
|---|---|---|
| 0 | SUBMITTED | 4/28/2023 |

Yates Co
4738 Whirlwind Dr.
San Antonio, TX 78217
Phone: 2107023820

(Confirm sizes and quantities prior to ordering)

## SA230015C NISD Village at West Pointe West ES - Air Flow Station Schedule

| Item | Tag | Serves | Width (in) | Height (in) | Min. Air Flow Range Setting (cfm) | Max Air Flow Range Setting (cfm) | Air Flow Station | Manufacturer |
|---|---|---|---|---|---|---|---|---|
| 1 | **AH-1 OA** | AH-1 OA | 18 | 62 | 0 | 5,000 | GTA116e | Ebtron |
| 2 | **AH-2 OA** | AH-2 OA | 14 | 50 | 0 | 5,000 | GTA116e | Ebtron |
| 3 | **AH-3 OA** | AH-3 OA | 12 | 50 | 0 | 5,000 | GTA116e | Ebtron |
| 4 | **AH-4 OA** | AH-4 OA | 24 | 72 | 0 | 5,000 | GTA116e | Ebtron |
| 5 | **AH-5 OA** | AH-5 OA | 24 | 72 | 0 | 5,000 | GTA116e | Ebtron |
| 6 | **AH-6 OA** | AH-6 OA | 18 | 66 | 0 | 5,000 | GTA116e | Ebtron |
| 7 | **AH-7 OA** | AH-7 OA | 16 | 60 | 0 | 5,000 | GTA116e | Ebtron |
| 8 | **AH-8 OA** | AH-8 OA | 16 | 52 | 0 | 5,000 | GTA116e | Ebtron |
| 9 | **AH-9 OA** | AH-9 OA | 48 | 60 | 0 | 5,000 | GTA116e | Ebtron |
| 10 | **AH-10 OA** | AH-10 OA | 48 | 60 | 0 | 5,000 | GTA116e | Ebtron |
| 11 | **AH-11 OA** | AH-11 OA | 48 | 66 | 0 | 5,000 | GTA116e | Ebtron |
| 12 | **AH-12 OA** | AH-12 OA | 48 | 60 | 0 | 5,000 | GTA116e | Ebtron |
| 13 | **AH-13 OA** | AH-13 OA | 24 | 72 | 0 | 5,000 | GTA116e | Ebtron |
| 14 | **AH-14 OA** | AH-14 OA | 42 | 48 | 0 | 5,000 | GTA116e | Ebtron |
| 15 | **E-9A EXH** | E-9A EXH | 16 | 16 | 0 | 5,000 | GTA116e | Ebtron |

AFMS Schedule

DWG # 1.3.1

JOB # VWPW

NISD Village at West Pointe West ES

San Antonio, TX

| REV # | DESCRIPTION | DATE |
|---|---|---|
| 0 | SUBMITTED | 4/28/2023 |

Drawn:
ENG: Dennis Schnellman

Yates Co
4738 Whirlwind Dr.
San Antonio, TX 78217
Phone: 2107023820

# NISD Village at West Pointe West ES
## VWPW

### Network Schedule 1003 - IP

| Network Number | MAC Address | Controller | Network Tag | Equipment Tag/Name | Floor Location | Area Served | Controller Location | S1 Network | S2 Network | Device Instance | IP Address | Subnet Mask | Default Gateway |
|---|---|---|---|---|---|---|---|---|---|---|---|---|---|
| 1003 | 1 | | CHW Sys | Chilled Water System | First Floor Area B | CEP | Boiler Rm B110 | N/A | N/A | 1003001 | TBD | TBD | TBD |
| 1003 | 1 | XT-LB | RTR-1 | Bldg Router | First Floor Area B | Campus | Boiler Rm B110 | 16014 | 16015 | 1003002 | TBD | TBD | TBD |
| 1003 | 1 | XT-LB | RTR-2 | Bldg Router | Second Floor Area C | Campus | Mech Rm C201 | 16016 | 16017 | 1003003 | TBD | TBD | TBD |

### Network Schedule 16014

| Network Number | MAC Address | Controller | Network Tag | Equipment Tag/Name | Equipment Location | Floor Location | Area Served | Controller Location | Device Instance |
|---|---|---|---|---|---|---|---|---|---|
| 16014 | 2 | OPN-UCXP | HW System | HW System | Boiler Rm B110 | First Floor Area B | Campus | Boiler Rm B110 | 1601402 |
| 16014 | 3 | OPN-UCXP | DHW Gens | DHW Gens | Boiler Rm B110 | First Floor Area B | Campus | Boiler Rm B110 | 1601403 |
| 16014 | 5 | OPN-UC | UH-2 | UH-2 | Fire Riser B112 | First Floor Area B | Fire Riser B112 | Fire Riser B112 | 1601405 |
| 16014 | 6 | Third Party | B-1 BACnet | B-1 BACnet | Boiler Rm B110 | First Floor Area B | Campus | Boiler Rm B110 | 1601406 |
| 16014 | 7 | Third Party | B-2 BACnet | B-2 BACnet | Boiler Rm B110 | First Floor Area B | Campus | Boiler Rm B110 | 1601407 |
| 16014 | 8 | Third Party | C-1 BACnet | C-1 BACnet | Chiller Yard | First Floor Area B | Campus | Boiler Rm B110 | 1601408 |
| 16014 | 9 | Third Party | C-2 BACnet | C-2 BACnet | Chiller Yard | First Floor Area B | Campus | Boiler Rm B110 | 1601409 |
| 16014 | 10 | OPN-UCXP | AH-1 | AH-1 | Roof | First Floor Area B | Kitchen | Kitchen | 1601410 |
| 16014 | 11 | OPN-APP | AH-1 Rel | AH-1 Rel | Kitchen B106 | First Floor Area B | Kitchen B106 | Kitchen B106 | 1601411 |
| 16014 | 12 | OPN-APP | MU-1 | MU-1 | Kitchen B106 | First Floor Area B | Kitchen B106 | Kitchen B106 | 1601412 |
| 16014 | 13 | OPN-UC | EFC 6 | EFC 6 | Kitchen B106 | First Floor Area B | E-1B; E-1C; E-1D | Kitchen B106 | 1601413 |
| 16014 | 14 | OPN-UC | Frz/Clr | Frz/Clr | Kitchen B106 | First Floor Area B | Frz/Clr | Kitchen B106B | 1601414 |
| 16014 | 15 | OPN-B3-P-02 | V-1 | V-1 | Kitchen Office B106B | First Floor Area B | Kitchen Office B106B | Kitchen Office B106B | 1601415 |
| 16014 | 16 | OPN-UC | RT-2 | RT-2 | Storage B105B | First Floor Area B | IDF B105A | Storage B105B | 1601416 |
| 16014 | 17 | OPN-UCXP | AH-2 | AH-2 | Roof | First Floor Area B | Platform | Cafeteria B104 | 1601417 |
| 16014 | 18 | OPN-APP | AH-2 Rel | AH-2 Rel | Platform B105 | First Floor Area B | Platform B105 | Cafeteria B104 | 1601418 |
| 16014 | 19 | OPN-UCXP | AH-3 | AH-3 | Roof | First Floor Area B | Music/Corr's | Cafeteria B104 | 1601419 |
| 16014 | 20 | OPN-UC | EFC 1 | EFC 1 | First Floor Area B | First Floor Area B | E-3; E-5 | Cafeteria B104 | 1601420 |
| 16014 | 21 | OPN-UCXP | AH-4 | AH-4 | Roof | First Floor Area B | Cafeteria | Cafeteria B104 | 1601421 |
| 16014 | 22 | OPN-APP | AH-4 Rel | AH-4 Rel | Cafeteria B104 | First Floor Area B | Cafeteria B104 | Cafeteria B104 | 1601422 |
| 16014 | 23 | OPN-UCXP | AH-5 | AH-5 | Roof | First Floor Area B | Gym | Cafeteria B104 | 1601423 |
| 16014 | 24 | OPN-APP | AH-5 Rel | AH-5 Rel | Gym B103 | First Floor Area B | Gym B103 | Cafeteria B104 | 1601424 |
| 16014 | 25 | OPN-B3-P-02 | F-3B | F-3B | Music B109 | First Floor Area B | Music Storage B109A / T/R B108 | Music B109 | 1601425 |
| 16014 | 26 | OPN-B3-P-02 | F-3A | F-3A | Music B109 | First Floor Area B | Music B109 | Music B109 | 1601426 |
| 16014 | 27 | OPN-UC | RT-1 | RT-1 | Custodian Closet B104B | First Floor Area B | Custodian Office B107 | Custodian Closet B104B | 1601427 |
| 16014 | 28 | OPN-B3-P-02 | F-3C | F-3C | Corridor XB101 | First Floor Area B | T/R B103A&B / Corridor XB101 / Storage B103D/E/F | Corridor XB101 | 1601428 |
| 16014 | 29 | OPN-B3-P-02 | V-3 | V-3 | Corridor XB101 | First Floor Area B | Elec B102 | Corridor XB101 | 1601429 |
| 16014 | 30 | OPN-B3-P-02 | V-5 | V-5 | Gym Office B103C | First Floor Area B | Gym Office B103C | Gym Office B103C | 1601430 |
| 16014 | 31 | OPN-UC | RT-3 | RT-3 | Large Storage B103F | First Floor Area B | MDF B101 | Large Storage B103F | 1601431 |
| 16014 | 32 | TV-MPCXP1628-NR | AH-7 | AH-7 | Roof | First Floor Area A | Admin-Offices | Roof | 1601432 |
| 16014 | 33 | OPN-B3-P-02 | F-7A | F-7A | Corridor XA105 | First Floor Area A | ISS A108 / Testing Stor. A109 / T/R A112 | Corridor XA105 | 1601433 |
| 16014 | 34 | OPN-B3-P-02 | F-7B | F-7B | Admin Storage A105A | First Floor Area A | Admin Stor. A105A / Admin Workroom A105 | Admin Storage A105A | 1601434 |
| 16014 | 35 | OPN-B3-P-02 | F-7C | F-7C | Office A110 | First Floor Area A | Office A110 / T/R A111 / Attend A103 / Hall XA103 | Office A110 | 1601435 |
| 16014 | 36 | OPN-B3-P-02 | F-7D | F-7D | Conference A107 | First Floor Area A | Conference A107 | Conference A107 | 1601436 |
| 16014 | 37 | OPN-B3-P-02 | F-7E | F-7E | Principal A106 | First Floor Area A | Principal A106 | Principal A106 | 1601437 |
| 16014 | 38 | OPN-B3-P-02 | F-7F | F-7F | Associate Principal A104 | First Floor Area A | Associate Principal A104 | Associate Principal A104 | 1601438 |
| 16014 | 39 | OPN-B3-P-02 | F-7G | F-7G | Secretarial A101A | First Floor Area A | Sec. Lobby XA101 / Corridor XA102 / Lobby XA106 | Secretarial A101A | 1601439 |
| 16014 | 40 | OPN-B3-P-02 | F-7H | F-7H | Secretarial A101A | First Floor Area A | Secretarial A101A | Secretarial A101A | 1601440 |
| 16014 | 41 | OPN-B3-P-02 | F-7J | F-7J | Nurses Clinic A102 | First Floor Area A | Nurses Clinic A102 | Nurses Clinic A102 | 1601441 |
| 16014 | 42 | OPN-UCXP | AH-8 | AH-8 | Roof | First Floor Area A | Admin-Counselors | Elec A122 | 1601442 |
| 16014 | 43 | OPN-UC | EFC 2 | EFC 2 | First Floor Area A | First Floor Area A | E-6; E-7;E-8;E-9C | Elec A122 | 1601443 |
| 16014 | 44 | OPN-B3-P-02 | V-8 | V-8 | Counselor A117 | First Floor Area A | Elec A122 | Counselor A117 | 1601444 |
| 16014 | 45 | OPN-B3-P-02 | F-8E | F-8E | Counselor A117 | First Floor Area A | Counselor A117 | Counselor A117 | 1601445 |
| 16014 | 46 | OPN-B3-P-02 | F-8D | F-8D | Counselor A118 | First Floor Area A | Counselor A118 / Calming Room A117A | Counselor A118 | 1601446 |
| 16014 | 47 | OPN-B3-P-02 | F-8A | F-8A | Teacher Resource A119 | First Floor Area A | Teacher Resource A119 / Hall XA109 & XA111 | Teacher Resource A119 | 1601447 |
| 16014 | 48 | OPN-B3-P-02 | F-8C | F-8C | Teacher Workroom A121 | First Floor Area A | Teacher Workroom A121 | Teacher Workroom A121 | 1601448 |
| 16014 | 49 | OPN-B3-P-02 | F-8B | F-8B | Teacher Lounge A120 | First Floor Area A | Teacher Lounge A120 / Hall XA110 | Teacher Lounge A120 | 1601449 |
| 16014 | 50 | OPN-UC | Kitch Ovrd | Kitchen Override | Kitchen Office B103C | First Floor Area B | Kitchen B106 | Kitchen Office B103C | 1601450 |
| 16014 | 51 | OPN-UC | Gym Ovrd | Gym Override | Gym Office B103C | First Floor Area B | Gym B103 | Gym Office B103C | 1601451 |

Network Schedules Pg.1

DWG # 1.4.1

JOB # VWPW

NISD Village at West Pointe West ES

San Antonio, TX

Drawn:

ENG: Dennis Schnellman

| REV # | DATE | DESCRIPTION |
|---|---|---|
| 2 | 2/20/2024 | Revision 2 |
| 0 | 4/28/2023 | SUBMITTED |

Yates Co
4738 Whirlwind Dr.
San Antonio, TX 78217
Phone: 2107023820

NISD Village at West Pointe West ES
VWPW

## Network Schedule 16015

| Network Number | MAC Address | Controller | Network Tag | Equipment Tag/Name | Equipment Location | Floor Location | Area Served | Controller Location | Device Instance |
|---|---|---|---|---|---|---|---|---|---|
| 16015 | 2 | OPN-B3-P-02 | F-9A | F-9A | Art A113 | First Floor Area A | Art A113 / Art Stor A113A | Art A113 | 1601502 |
| 16015 | 3 | OPN-APP | EFC 3 | EFC 3 | Art A113 | First Floor Area A | E-9A; E-9B | Art A113 | 1601503 |
| 16015 | 4 | OPN-B3-P-02 | V-6 | V-6 | Library Office A115A | First Floor Area A | Library Office A115A | Library Office A115A | 1601504 |
| 16015 | 5 | OPN-UCXP | AH-6 | AH-6 | Roof | First Floor Area A | Library | A/V Storage A115B | 1601505 |
| 16015 | 6 | OPN-APP | AH-6 Rel | AH-6 Rel | Library A115 | First Floor Area A | Library | A/V Storage A115B | 1601506 |
| 16015 | 7 | OPN-B3-P-02 | F-9B | F-9B | ECSE A123 | First Floor Area A | ECSE A123 | ECSE A123 | 1601507 |
| 16015 | 8 | OPN-B3-P-02 | F-9C | F-9C | Pre-K A124 | First Floor Area A | Pre-K A124 / Vest A123B / T/R A123BA&B | Pre-K A124 | 1601508 |
| 16015 | 9 | OPN-B3-P-02 | F-9D | F-9D | Kinder A127 | First Floor Area A | Kinder A127 / Vest A127 | Kinder A127 | 1601509 |
| 16015 | 10 | OPN-B3-P-02 | F-9F | F-9F | Stem Lab A125 | First Floor Area A | Stem Lab A125 | Stem Lab A125 | 1601510 |
| 16015 | 11 | OPN-B3-P-02 | F-9G | F-9G | Spec Instr A126 | First Floor Area A | Spec Instr A126 | Spec Instr A126 | 1601511 |
| 16015 | 12 | OPN-B3-P-02 | F-9E | F-9E | Spec Instr A126 | First Floor Area A | Corridor XA107 / T/R A116 | Spec Instr A126 | 1601512 |
| 16015 | 13 | OPN-UCXP | AH-9 | AH-9 | Mech Rm C101 | First Floor Area C | A1 & E1 C/R's | Mech Rm C101 | 1601513 |
| 16015 | 14 | OPN-UC | EFC 7 | EFC 7 | First Floor Area E | First Floor Area C | E-18 | Mech Rm C101 | 1601514 |
| 16015 | 15 | OPN-B3-P-02 | F-10F | F-10F | Kinder C106 | First Floor Area C | Kinder C106 | Kinder C106 | 1601515 |
| 16015 | 16 | OPN-B3-P-02 | F-10G | F-10G | Kinder C108 | First Floor Area C | Kinder C108 | Kinder C108 | 1601516 |
| 16015 | 17 | OPN-B3-P-02 | F-10H | F-10H | Kinder C110 | First Floor Area C | Kinder C110 | Kinder C110 | 1601517 |
| 16015 | 18 | OPN-B3-P-02 | F-10J | F-10J | Kinder C112 | First Floor Area C | Kinder C112 | Kinder C112 | 1601518 |
| 16015 | 19 | OPN-B3-P-02 | F-10L | F-10L | Kinder C115 | First Floor Area C | Kinder C115 | Kinder C115 | 1601519 |
| 16015 | 20 | OPN-B3-P-02 | F-10E | F-10E | Gifted & Talented C111 | First Floor Area C | Gifted & Talented C111 | Gifted & Talented C111 | 1601520 |
| 16015 | 21 | OPN-B3-P-02 | F-10D | F-10D | BMC C109 | First Floor Area C | BMC C109 | BMC C109 | 1601521 |
| 16015 | 22 | OPN-B3-P-02 | F-10K | F-10K | BMC C109 | First Floor Area C | Corridor XC101 / T/R C103 / Boys C113 / Girls C114 | BMC C109 | 1601522 |
| 16015 | 23 | OPN-B3-P-02 | F-10B | F-10B | ALE C107 | First Floor Area C | ALE C107 | ALE C107 | 1601523 |
| 16015 | 24 | OPN-B3-P-02 | F-10C | F-10C | ALE C107 | First Floor Area C | ALE Closet C105A&7A / Kitch. C107B / T/R C107C | ALE C107 | 1601524 |
| 16015 | 25 | OPN-B3-P-02 | F-10A | F-10A | Specialized Instr. C105 | First Floor Area C | Specialized Instr. C105 | Specialized Instr. C105 | 1601525 |
| 16015 | 26 | OPN-B3-P-02 | F-11A | F-11A | 1st Grade D106 | First Floor Area D | ESL D102 / Speech D101 | 1st Grade D106 | 1601526 |
| 16015 | 27 | OPN-B3-P-02 | F-11B | F-11B | 1st Grade D106 | First Floor Area D | 1st Grade D106 | 1st Grade D106 | 1601527 |
| 16015 | 28 | OPN-B3-P-02 | F-11C | F-11C | 1st Grade D108 | First Floor Area D | 1st Grade D108 | 1st Grade D108 | 1601528 |
| 16015 | 29 | OPN-B3-P-02 | F-11D | F-11D | 1st Grade D110 | First Floor Area D | 1st Grade D110 | 1st Grade D110 | 1601529 |
| 16015 | 30 | OPN-B3-P-02 | F-11F | F-11F | 1st Grade D109 | First Floor Area D | 1st Grade D109 | 1st Grade D109 | 1601530 |
| 16015 | 31 | OPN-B3-P-02 | F-11E | F-11E | 1st Grade D107 | First Floor Area D | Corridor XD101 / Boys D103 / Girls D104 | 1st Grade D107 | 1601531 |
| 16015 | 32 | OPN-B3-P-02 | F-11G | F-11G | 1st Grade D107 | First Floor Area D | 1st Grade D107 | 1st Grade D107 | 1601532 |
| 16015 | 33 | OPN-B3-P-02 | F-11H | F-11H | 1st Grade D105 | First Floor Area D | 1st Grade D105 | 1st Grade D105 | 1601533 |
| 16015 | 34 | OPN-UC | LC 1 | LC 1 | Elec E106 | First Floor Area E | C1,C2,C3 | Elec E106 | 1601534 |
| 16015 | 35 | OPN-UC | LC 2 | LC 2 | Elec E106 | First Floor Area E | C4,C5,C6 | Elec E106 | 1601535 |
| 16015 | 36 | OPN-UC | SP-1 | SP-1 | Elec Machine Rm E105 | First Floor Area E | Elevator Sump | Elec E106 | 1601536 |
| 16015 | 37 | OPN-B3-P-02 | F-11M | F-11M | 2nd Grade E108 | First Floor Area E | Corridor XE101 & XE102 | 2nd Grade E108 | 1601537 |
| 16015 | 38 | OPN-B3-P-02 | F-11J | F-11J | 2nd Grade E108 | First Floor Area E | 2nd Grade E108 | 2nd Grade E108 | 1601538 |
| 16015 | 39 | OPN-B3-P-02 | F-11K | F-11K | 2nd Grade E110 | First Floor Area E | 2nd Grade E110 | 2nd Grade E110 | 1601539 |
| 16015 | 40 | OPN-B3-P-02 | F-11L | F-11L | 2nd Grade E112 | First Floor Area E | 2nd Grade E112 | 2nd Grade E112 | 1601540 |
| 16015 | 41 | OPN-B3-P-02 | F-9K | F-9K | 2nd Grade E111 | First Floor Area E | 2nd Grade E111 | 2nd Grade E111 | 1601541 |
| 16015 | 42 | OPN-B3-P-02 | F-9J | F-9J | 2nd Grade E109 | First Floor Area E | 2nd Grade E109 | 2nd Grade E109 | 1601542 |
| 16015 | 43 | OPN-B3-P-02 | F-9H | F-9H | 2nd Grade E107 | First Floor Area E | 2nd Grade E107 | 2nd Grade E107 | 1601543 |
| 16015 | 44 | OPN-B3-P-02 | V-11 | V-11 | 2nd Grade E107 | First Floor Area E | Elec E106 | 2nd Grade E107 | 1601544 |
| 16015 | 45 | OPN-UC | WH | WH | Mech Rm C101 | First Floor Area C | Campus | Mech Rm C101 | 1601545 |

Network Schedules Pg.2
DWG # 1.4.2
JOB # VWPW
NISD Village at West Pointe West ES
San Antonio, TX

Drawn:
ENG: Dennis Schnellman

| REV # | DESCRIPTION | DATE |
|---|---|---|
| 0 | SUBMITTED | 4/28/2023 |

Yates Co
4738 Whirlwind Dr.
San Antonio, TX 78217
Phone: 2107023820

# NISD Village at West Pointe West ES
## VWPW

### Network Schedule 16016

| Network Number | MAC Address | Controller | Network Tag | Equipment Tag/Name | Equipment Location | Floor Location | Area Served | Controller Location | Device Instance |
|---|---|---|---|---|---|---|---|---|---|
| 16016 | 2 | OPN-UCXP | AH-10 | AH-10 | Mech Rm D201 | Second Floor Area D | C1 Classrooms | Mech Rm D201 | 1601602 |
| 16016 | 3 | OPN-APP | AH-10 Rel | AH-10 Rel | Second Floor Area C | Second Floor Area C | C1 Classrooms | Mech Rm D201 | 1601603 |
| 16016 | 4 | OPN-UCXP | AH-11 | AH-11 | Mech Rm D201 | Second Floor Area D | D1 & E1 Classrooms | Mech Rm D201 | 1601604 |
| 16016 | 5 | OPN-UC | EFC 5 | EFC 5 | Mech Rm D201 | Second Floor Area D | E-11; E-13A; E-13B; E14 | Mech Rm D201 | 1601605 |
| 16016 | 7 | OPN-UCXP | AH-12 | AH-12 | Mech Rm C209 | Second Floor Area C | C2 Classrooms | Mech Rm C209 | 1601607 |
| 16016 | 8 | OPN-APP | AH-12 Rel | AH-12 Rel | Second Floor Area C | Second Floor Area C | C2 Classrooms | Mech Rm C209 | 1601608 |
| 16016 | 9 | OPN-UC | EFC 4 | EFC 4 | Second Floor Area C | Second Floor Area C | E-10A; E-10B; E-12A; E-12B | Mech Rm C209 | 1601609 |
| 16016 | 10 | OPN-B3-P-02 | F-12C | F-12C | Second Floor Area C | Second Floor Area C | 3rd Grade Rm C211A | 3rd Grade Rm C211A | 1601610 |
| 16016 | 11 | OPN-B3-P-02 | F-12H | F-12H | Second Floor Area C | Second Floor Area C | Corridor XC201 | 3rd Grade Rm C214 | 1601611 |
| 16016 | 12 | OPN-B3-P-02 | F-12E | F-12E | Second Floor Area C | Second Floor Area C | 3rd Grade Rm C214 | 3rd Grade Rm C214 | 1601612 |
| 16016 | 13 | OPN-B3-P-02 | F-12F | F-12F | Second Floor Area C | Second Floor Area C | 3rd Grade Rm C216 | 3rd Grade Rm C216 | 1601613 |
| 16016 | 14 | OPN-B3-P-02 | F-12G | F-12G | Second Floor Area C | Second Floor Area C | Boys C218 & Girls C219 | 3rd Grade Rm C216 | 1601614 |
| 16016 | 15 | OPN-B3-P-02 | F-12L | F-12L | Second Floor Area C | Second Floor Area C | Large Classroom C220 | Large Classroom C220 | 1601615 |
| 16016 | 16 | OPN-B3-P-02 | F-12K | F-12K | Second Floor Area C | Second Floor Area C | 3rd Grade Rm C217 | 3rd Grade Rm C217 | 1601616 |
| 16016 | 17 | OPN-B3-P-02 | F-12J | F-12J | Second Floor Area C | Second Floor Area C | 3rd Grade Rm C2115 | 3rd Grade Rm C215 | 1601617 |
| 16016 | 18 | OPN-B3-P-02 | F-12D | F-12D | Second Floor Area C | Second Floor Area C | Small Classroom C212 & C213 | Small Classroom C212 | 1601618 |
| 16016 | 19 | OPN-B3-P-02 | F-12B | F-12B | Second Floor Area C | Second Floor Area C | 3rd Grade Rm C210 | 3rd Grade Rm C210 | 1601619 |
| 16016 | 20 | OPN-B3-P-02 | F-12A | F-12A | Second Floor Area C | Second Floor Area C | Small Classroom C207 & C208 | Small Classroom C208 | 1601620 |

### Network Schedule 16017

| Network Number | MAC Address | Controller | Network Tag | Equipment Tag/Name | Equipment Location | Floor Location | Area Served | Controller Location | Device Instance |
|---|---|---|---|---|---|---|---|---|---|
| 16017 | 2 | OPN-UCXP | AH-14 | AH-14 | Mech Rm C201 | Second Floor Area C | E2 Classrooms | Mech Rm C201 | 1601702 |
| 16017 | 3 | OPN-B3-P-02 | V-14 | V-14 | Storage E206 | Second Floor Area E | Elec E205 | Storage E206 | 1601703 |
| 16017 | 4 | OPN-B3-P-02 | F-14G | F-14G | 5th Grade E207 | Second Floor Area E | Corridor XE202 / Stairwell | 5th Grade E207 | 1601704 |
| 16017 | 5 | OPN-B3-P-02 | F-14B | F-14B | 5th Grade E207 | Second Floor Area E | 5th Grade E207 | 5th Grade E207 | 1601705 |
| 16017 | 6 | OPN-B3-P-02 | F-14D | F-14D | 5th Grade E209 | Second Floor Area E | 5th Grade E209 | 5th Grade E209 | 1601706 |
| 16017 | 7 | OPN-B3-P-02 | F-14F | F-14F | 5th Grade E211 | Second Floor Area E | 5th Grade E211 | 5th Grade E211 | 1601707 |
| 16017 | 8 | OPN-B3-P-02 | F-14E | F-14E | 5th Grade E212 | Second Floor Area E | 5th Grade E212 | 5th Grade E212 | 1601708 |
| 16017 | 9 | OPN-B3-P-02 | F-14C | F-14C | 5th Grade E210 | Second Floor Area E | 5th Grade E210 | 5th Grade E210 | 1601709 |
| 16017 | 10 | OPN-B3-P-02 | F-14A | F-14A | 5th Grade E208 | Second Floor Area E | 5th Grade E208 | 5th Grade E208 | 1601710 |
| 16017 | 11 | OPN-B3-P-02 | F-13G | F-13G | 4th Grade D204 | Second Floor Area E | Corridor XD201 / Boys D202 / Girls D203 | 4th Grade D204 | 1601711 |
| 16017 | 12 | OPN-B3-P-02 | F-13E | F-13E | 4th Grade D204 | Second Floor Area E | 4th Grade D204 | 4th Grade D204 | 1601712 |
| 16017 | 13 | OPN-B3-P-02 | F-13D | F-13D | 4th Grade D206 | Second Floor Area D | 4th Grade D206 | 4th Grade D206 | 1601713 |
| 16017 | 14 | OPN-B3-P-02 | F-13H | F-13H | 4th Grade D206 | Second Floor Area D | Corridor XD201 / Stairwell | 4th Grade D206 | 1601714 |
| 16017 | 15 | OPN-B3-P-02 | F-13A | F-13A | 4th Grade D208 | Second Floor Area D | 4th Grade D208 | 4th Grade D208 | 1601715 |
| 16017 | 16 | OPN-UCXP | AH-13 | AH-13 | Roof | Second Floor Area D | D2 Classrooms | Cust D210 | 1601716 |
| 16017 | 17 | OPN-UC | CHW Prs | CHW Prs | Second Floor Area D | Second Floor Area D | CHW Prs | Cust D210 | 1601717 |
| 16017 | 18 | OPN-UC | HW Prs | HW Prs | Second Floor Area D | Second Floor Area D | CHW Prs | Cust D210 | 1601718 |
| 16017 | 19 | OPN-B3-P-02 | F-13B | F-13B | 4th Grade D209 | Second Floor Area D | 4th Grade D209 | 4th Grade D209 | 1601719 |
| 16017 | 20 | OPN-B3-P-02 | F-13C | F-13C | 4th Grade D207 | Second Floor Area D | 4th Grade D207 | 4th Grade D207 | 1601720 |
| 16017 | 21 | OPN-B3-P-02 | F-13F | F-13F | 4th Grade D205 | Second Floor Area D | 4th Grade D205 | 4th Grade D205 | 1601721 |

Network Schedules Pg.3

DWG # 1.4.3

JOB # VWPW

NISD Village at West Pointe West ES

San Antonio, TX

Drawn:

ENG: Dennis Schnellman

| REV # | DESCRIPTION | DATE |
|---|---|---|
| 0 | SUBMITTED | 4/28/2023 |

Yates Co
4738 Whirlwind Dr.
San Antonio, TX 78217
Phone: 2107023820

# NISD Village at West Pointe West ES
# VWPW

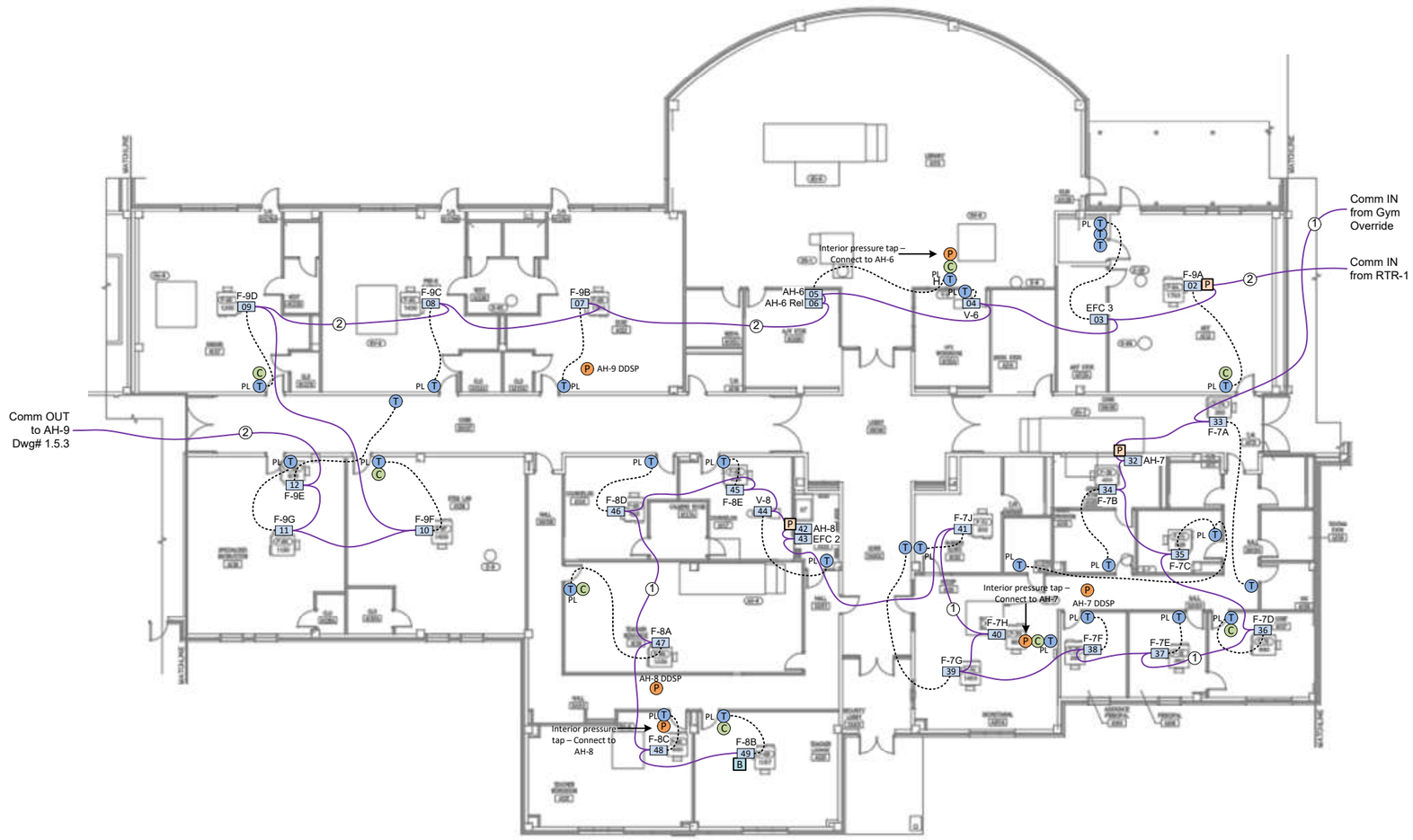


## Network Riser Legend

- B — BT485 Network Termination + Bias
- T — TERM485 Network Termination
- E — End-of-line Network Termination (onboard dip switch)
- R — REP485 Network Repeater
- P — PROT485 Network Protection Board
- D — DIAG485 Network Diagnostic Board

- BACnet MS/TP Wiring
- I/O Expander Wiring
- Ethernet Wiring
- Other Wiring
- Sensor Wiring

1 Controller

Sensor Type
B=Base
PL=Plus
P=Pro
M=Motion

PL T
2 HC — CO2 Included
Humidity Included
Address

P Pressure Sensor
C Zone CO2 Sensor

| NETWORK LEGEND |
|---|
| 1 Network 16014 |
| 2 Network 16015 |
| 3 Network 16016 |
| 4 Network 16017 |

Network: 1st Floor Area A

DWG # 1.5.1

JOB # VWPW

NISD Village at West Pointe West ES

San Antonio, TX

Drawn:
ENG: Dennis Schnellman

| REV # | DATE | DESCRIPTION |
|---|---|---|
| 2 | 2/20/2024 | Revision 2 |
| 0 | 4/28/2023 | SUBMITTED |


Yates Co
4738 Whirlwind Dr.
San Antonio, TX 78217
Phone: 2107023820

# NISD Village at West Pointe West ES
# VWPW

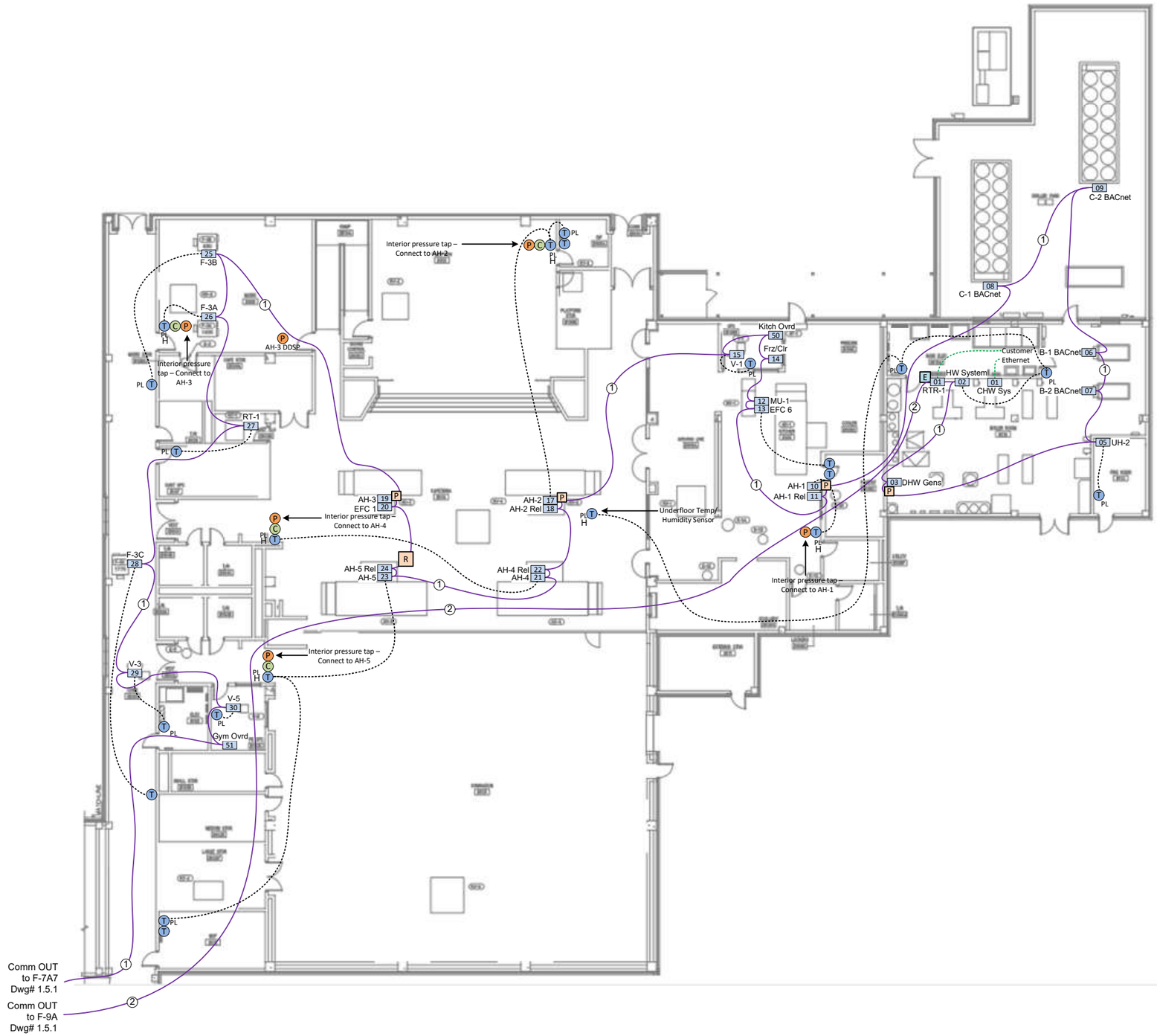


| NETWORK LEGEND |
|---|
| ① Network 16014 |
| ② Network 16015 |
| ③ Network 16016 |
| ④ Network 16017 |

## Network Riser Legend

- B — BT485 Network Termination + Bias
- T — TERM485 Network Termination
- E — End-of-line Network Termination (onboard dip switch)
- R — REP485 Network Repeater
- P — PROT485 Network Protection Board
- D — DIAG485 Network Diagnostic Board

- BACnet MS/TP Wiring
- I/O Expander Wiring
- Ethernet Wiring
- Other Wiring
- Sensor Wiring

1 Controller

Sensor Type
B=Base
PL=Plus
P=Pro
M=Motion

PL T
2 HC — CO2 Included
Humidity Included
Address

P Pressure Sensor
C Zone CO2 Sensor

Network: 1st Floor Area B

DWG # 1.5.2

JOB # VWPW

NISD Village at West Pointe West ES

San Antonio, TX

Drawn:
ENG: Dennis Schnellman

| REV # | DESCRIPTION | DATE |
|---|---|---|
| 0 | SUBMITTED | 4/28/2023 |


Yates Co
4738 Whirlwind Dr.
San Antonio, TX 78217
Phone: 2107023820

# NISD Village at West Pointe West ES
# VWPW

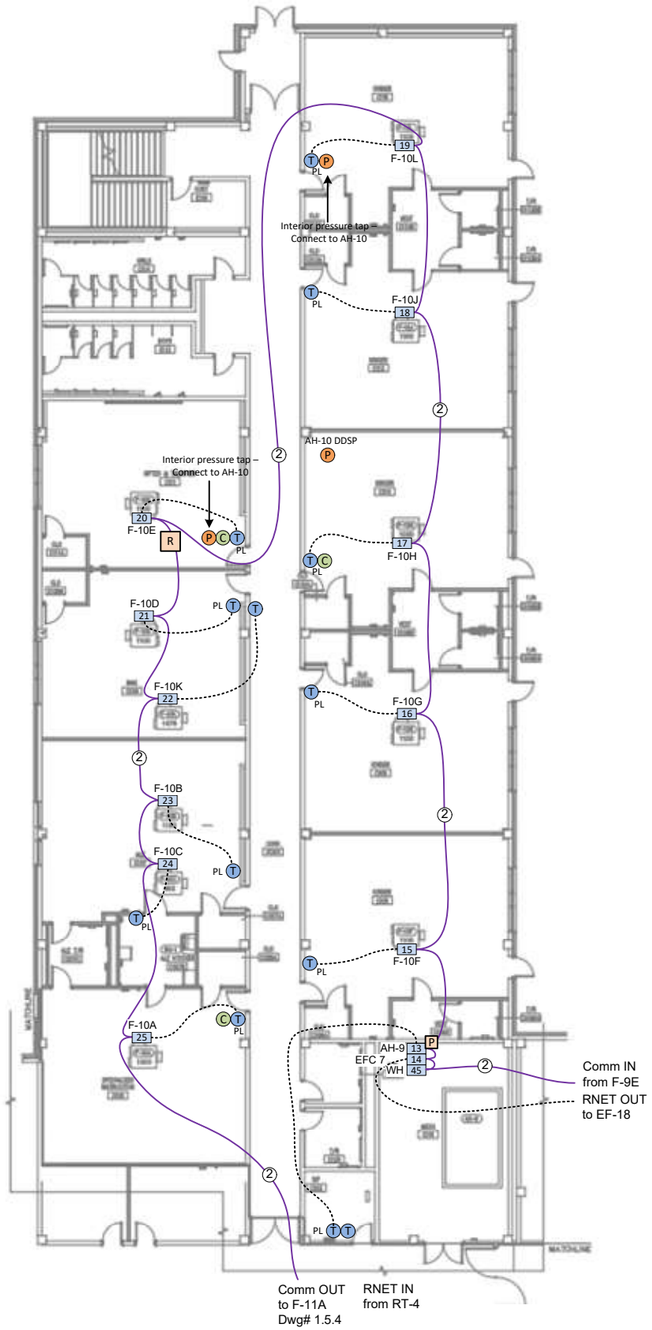


## Network Riser Legend

- B — BT485 Network Termination + Bias
- T — TERM485 Network Termination
- E — End-of-line Network Termination (onboard dip switch)
- R — REP485 Network Repeater
- P — PROT485 Network Protection Board
- D — DIAG485 Network Diagnostic Board

- BACnet MS/TP Wiring
- I/O Expander Wiring
- Ethernet Wiring
- Other Wiring
- Sensor Wiring

1 Controller

Sensor Type
B=Base
PL=Plus
P=Pro
M=Motion

PL T
2 HC — CO2 Included
Humidity Included
Address

P Pressure Sensor
C Zone CO2 Sensor

| NETWORK LEGEND |
|---|
| ① Network 16014 |
| ② Network 16015 |
| ③ Network 16016 |
| ④ Network 16017 |

Network: 1st Floor Area C

DWG # 1.5.3

JOB # VWPW

NISD Village at West Pointe West ES

San Antonio, TX

Drawn:
ENG: Dennis Schnellman

| REV # | DESCRIPTION | DATE |
|---|---|---|
| 0 | SUBMITTED | 4/28/2023 |


Yates Co
4738 Whirlwind Dr.
San Antonio, TX 78217
Phone: 2107023820

# NISD Village at West Pointe West ES
# VWPW

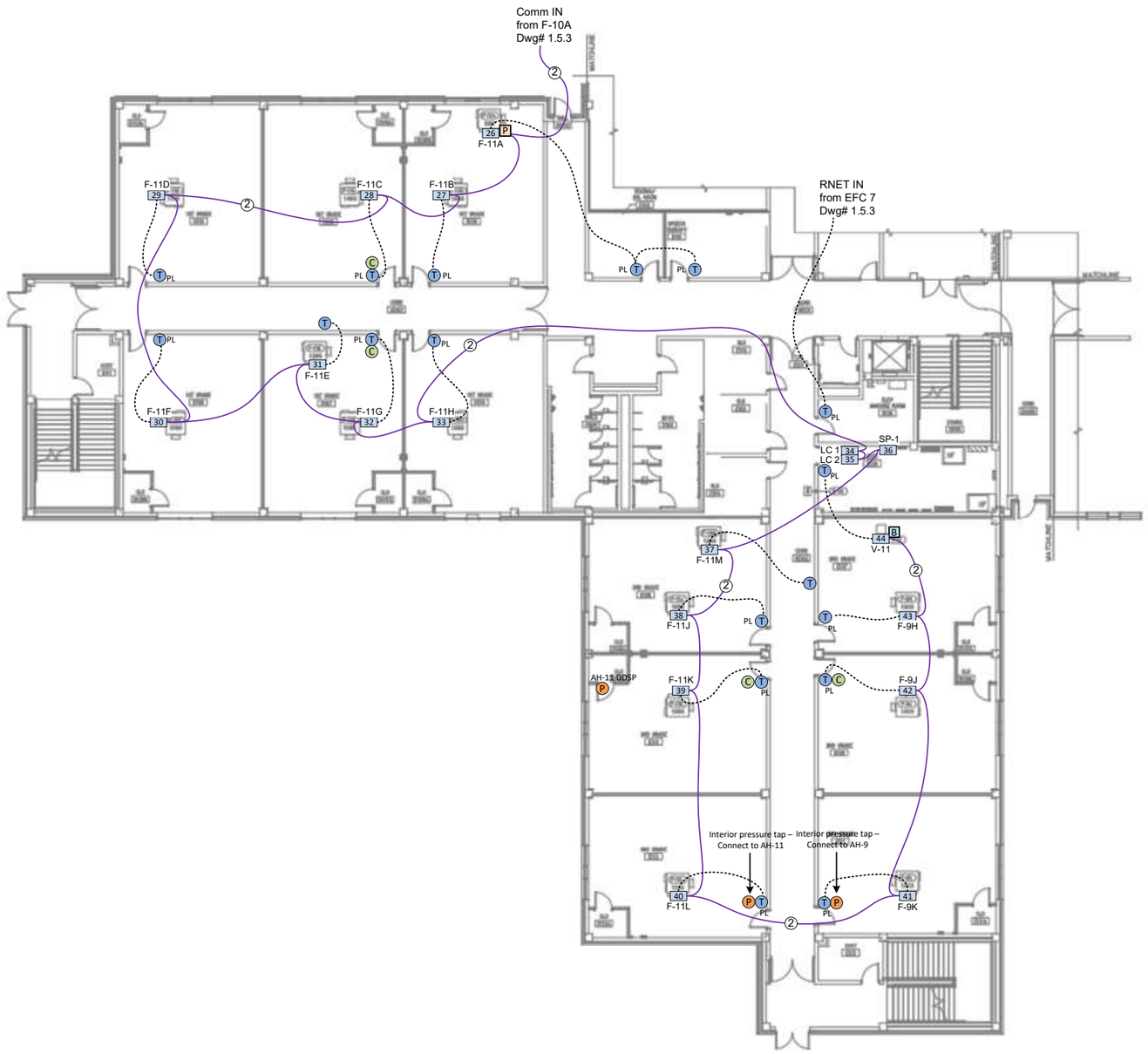


## Network Riser Legend

- B — BT485 Network Termination + Bias
- T — TERM485 Network Termination
- E — End-of-line Network Termination (onboard dip switch)
- R — REP485 Network Repeater
- P — PROT485 Network Protection Board
- D — DIAG485 Network Diagnostic Board

- BACnet MS/TP Wiring
- I/O Expander Wiring
- Ethernet Wiring
- Other Wiring
- Sensor Wiring

- 1 — Controller

Sensor Type
B=Base
PL=Plus — PL (T)
P=Pro
M=Motion
2 HC — CO2 Included
Humidity Included
Address

- (P) Pressure Sensor
- (C) Zone CO2 Sensor

| NETWORK LEGEND |
|---|
| ① Network 16014 |
| ② Network 16015 |
| ③ Network 16016 |
| ④ Network 17017 |

Network: 1st Floor Area D&E

DWG # 1.5.4

JOB # VWPW

NISD Village at West Pointe West ES

San Antonio, TX

Drawn:
ENG: Dennis Schnellman

| REV # | DESCRIPTION | DATE |
|---|---|---|
| 0 | SUBMITTED | 4/28/2023 |


Yates Co
4738 Whirlwind Dr.
San Antonio, TX 78217
Phone: 2107023820

# NISD Village at West Pointe West ES
# VWPW

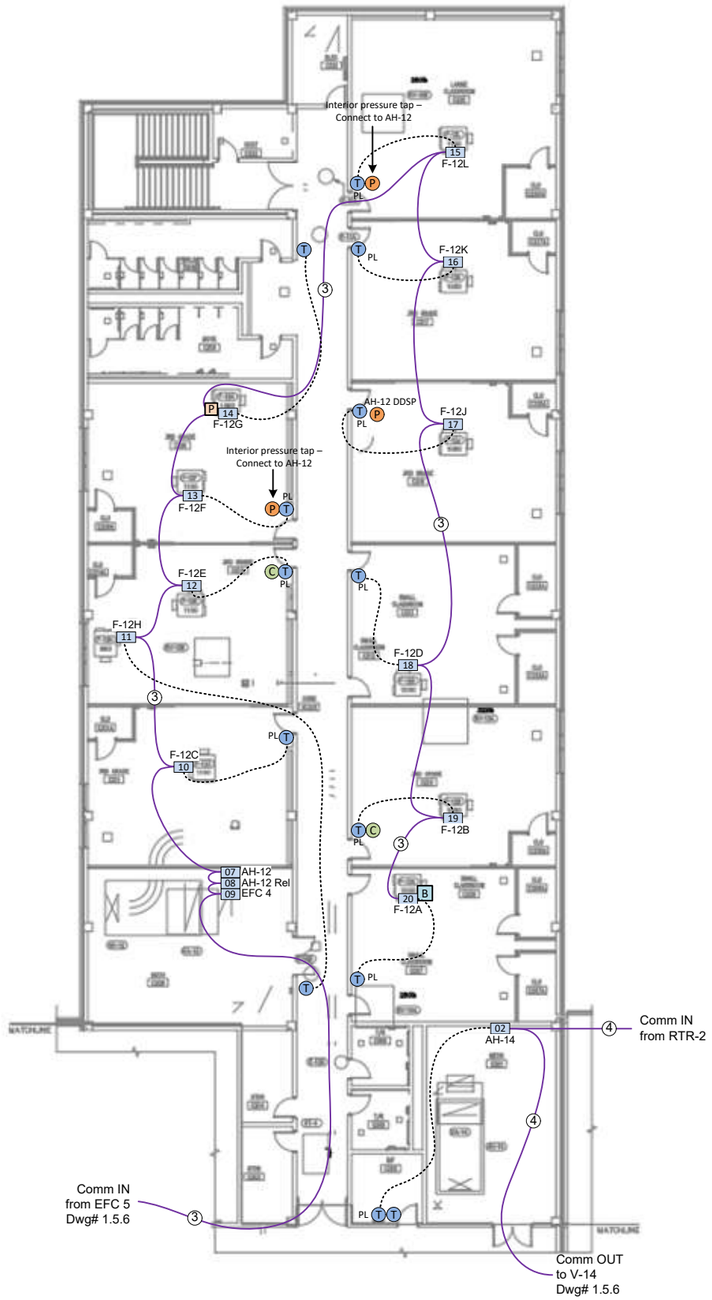


## Network Riser Legend

- B — BT485 Network Termination + Bias
- T — TERM485 Network Termination
- E — End-of-line Network Termination (onboard dip switch)
- R — REP485 Network Repeater
- P — PROT485 Network Protection Board
- D — DIAG485 Network Diagnostic Board

- BACnet MS/TP Wiring
- I/O Expander Wiring
- Ethernet Wiring
- Other Wiring
- Sensor Wiring

1 Controller

**Sensor Type**
B=Base
PL=Plus
P=Pro
M=Motion

PL T
2 HC — CO2 Included
Humidity Included
Address

P Pressure Sensor
C Zone CO2 Sensor

| NETWORK LEGEND |
|---|
| 1 Network 16014 |
| 2 Network 16015 |
| 3 Network 16016 |
| 4 Network 16017 |

Network: 2nd Floor Area C

DWG # 1.5.5

JOB # VWPW

NISD Village at West Pointe West ES

San Antonio, TX

Drawn:
ENG: Dennis Schnellman

| REV # | DESCRIPTION | DATE |
|---|---|---|
| 0 | SUBMITTED | 4/28/2023 |


Yates Co
4738 Whirlwind Dr.
San Antonio, TX 78217
Phone: 2107023820

# NISD Village at West Pointe West ES
# VWPW

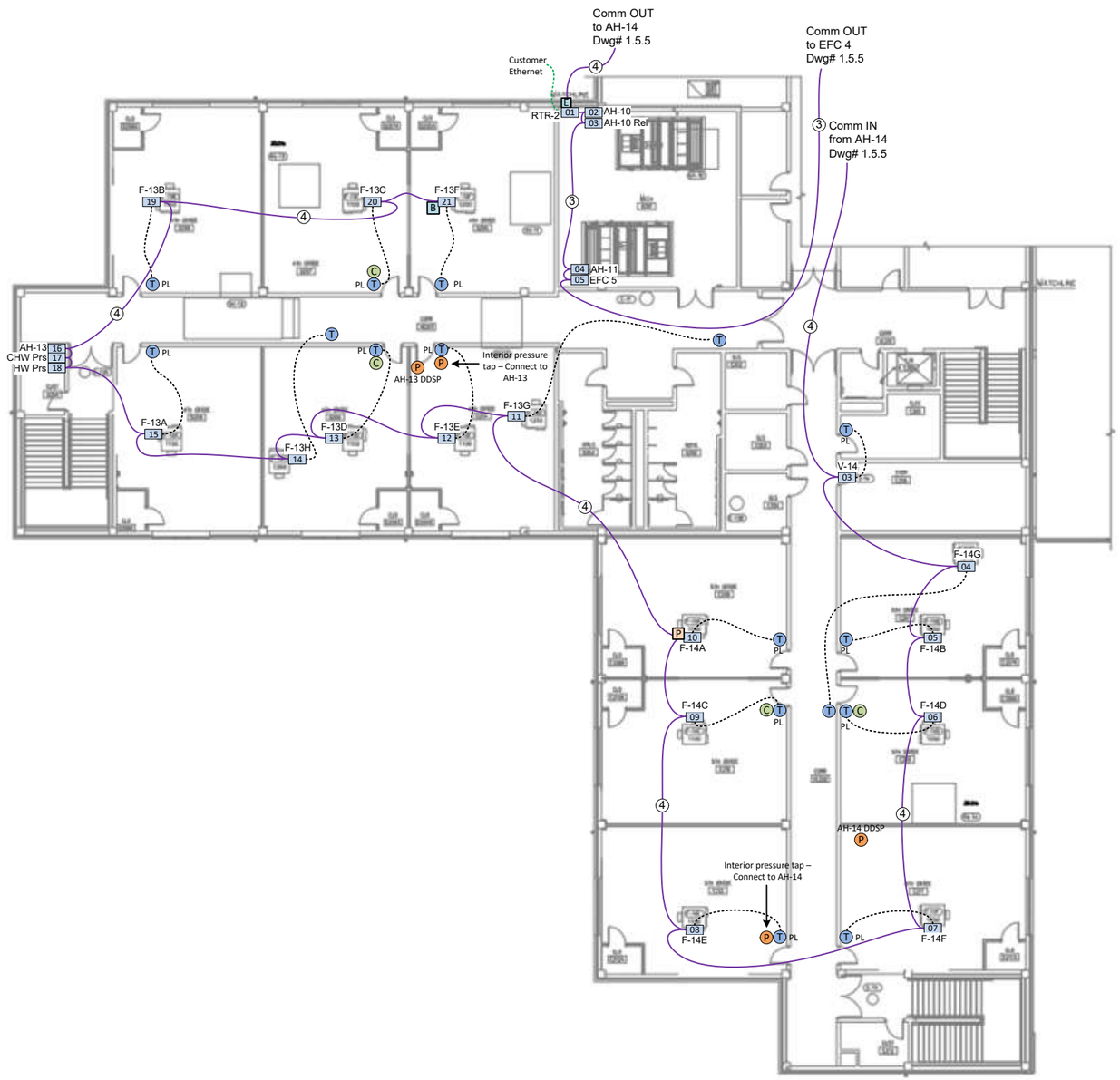


## Network Riser Legend

- B — BT485 Network Termination + Bias
- T — TERM485 Network Termination
- E — End-of-line Network Termination (onboard dip switch)
- R — REP485 Network Repeater
- P — PROT485 Network Protection Board
- D — DIAG485 Network Diagnostic Board

- BACnet MS/TP Wiring
- I/O Expander Wiring
- Ethernet Wiring
- Other Wiring
- Sensor Wiring

1 Controller

Sensor Type
B=Base
PL=Plus — PL T
P=Pro
M=Motion
2 HC — CO2 Included
Humidity Included
Address

P Pressure Sensor
C Zone CO2 Sensor

| NETWORK LEGEND |
|---|
| ① Network 16014 |
| ② Network 16015 |
| ③ Network 16016 |
| ④ Network 16017 |

Network: 2nd Floor Area D&E

DWG # 1.5.6

JOB # VWPW

NISD Village at West Pointe West ES

San Antonio, TX

Drawn:
ENG: Dennis Schnellman

| REV # | DESCRIPTION | DATE |
|---|---|---|
| 0 | SUBMITTED | 4/28/2023 |


Yates Co
4738 Whirlwind Dr.
San Antonio, TX 78217
Phone: 2107023820

# NISD Village at West Pointe West ES
# VWPW

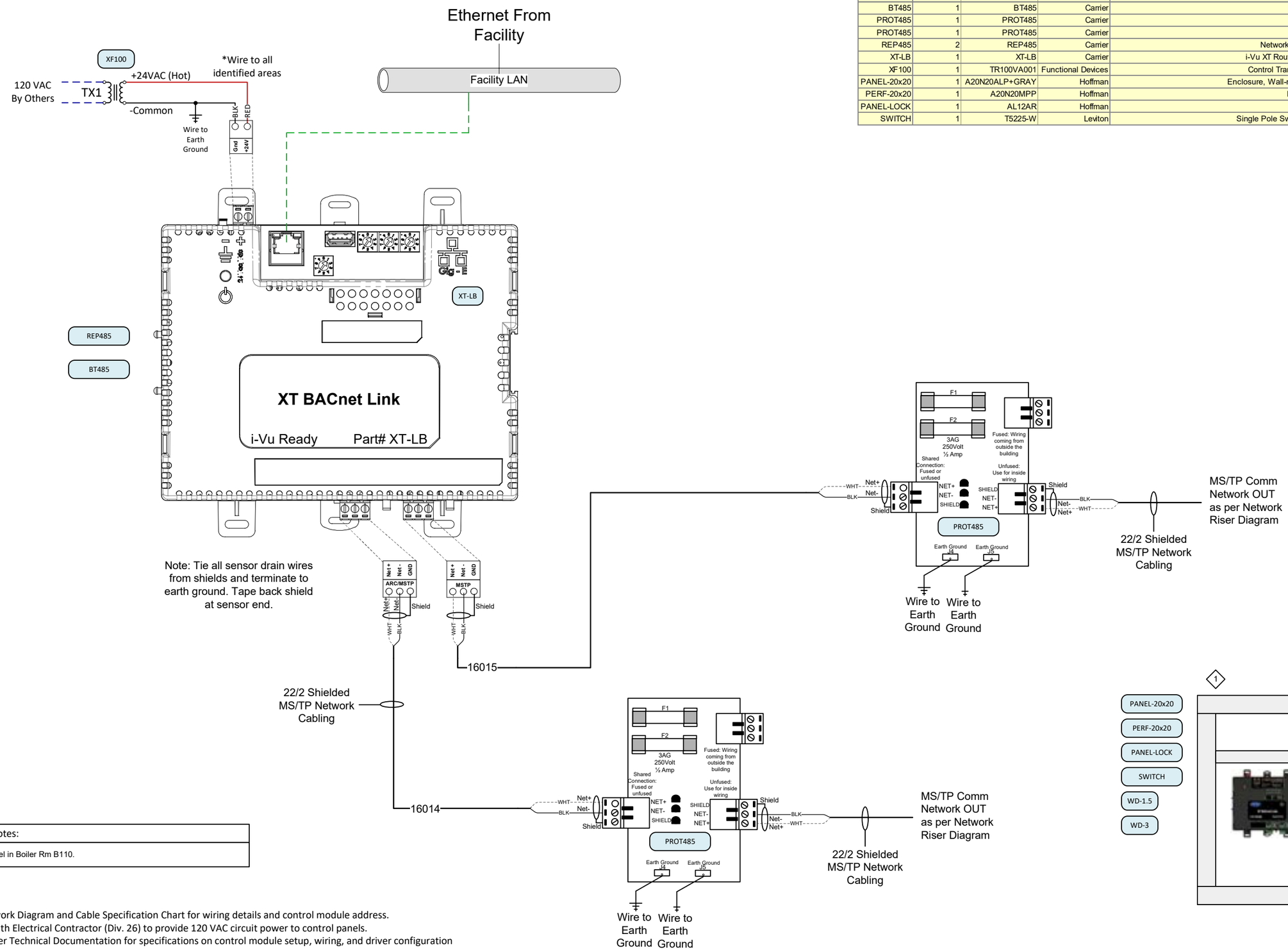


## Bill of Materials

| DID | Quantity | Part # | Manufacturer | Description |
|---|---|---|---|---|
| WD-1.5 | 1 | WD-B40X80N | c3controls | 1 1/2"W X 3"H Narrow Slot, Wiring Duct & Cover, 1pc, 6ft |
| WD-3 | 2 | WD-B80X80N | c3controls | 3"W X 3"H Narrow Slot, Wiring Duct & Cover, 1pc, 6ft |
| BT485 | 1 | BT485 | Carrier | Network Termination & Bias (16 pack) |
| PROT485 | 1 | PROT485 | Carrier | Network Protection Board |
| PROT485 | 1 | PROT485 | Carrier | Network Protection Board |
| REP485 | 2 | REP485 | Carrier | Network Repeater (every 31 controllers or 2000 ft.) |
| XT-LB | 1 | XT-LB | Carrier | i-Vu XT Router; up to 60 controllers on BACnet MS/TP |
| XF100 | 1 | TR100VA001 | Functional Devices | Control Transformer (120 VAC Input - 24 VAC Output) |
| PANEL-20x20 | 1 | A20N20ALP+GRAY | Hoffman | Enclosure, Wall-mount, Hinged, Steel, NEMA1, 20"x20"x6" |
| PERF-20x20 | 1 | A20N20MPP | Hoffman | Enclosure, Perforated Back Plate, 20"x20" |
| PANEL-LOCK | 1 | AL12AR | Hoffman | Enclosure Key Lock Kit |
| SWITCH | 1 | T5225-W | Leviton | Single Pole Switch, Standard Receptacle; Self-grounding |

| Key Drawing Notes: | |
|---|---|
| 1 | Locate panel in Boiler Rm B110. |

General Notes:
1. Refer to Network Diagram and Cable Specification Chart for wiring details and control module address.
2. Coordinate with Electrical Contractor (Div. 26) to provide 120 VAC circuit power to control panels.
3. Refer to Carrier Technical Documentation for specifications on control module setup, wiring, and driver configuration

Network Router 1

DWG # 1.6.1

JOB # VWPW

NISD Village at West Pointe West ES

San Antonio, TX

| REV # | DESCRIPTION | DATE |
|---|---|---|
| 0 | SUBMITTED | 4/28/2023 |

Drawn: ENG: Dennis Schnellman


Yates Co
4738 Whirlwind Dr.
San Antonio, TX 78217
Phone: 2107023820

# NISD Village at West Pointe West ES
# VWPW

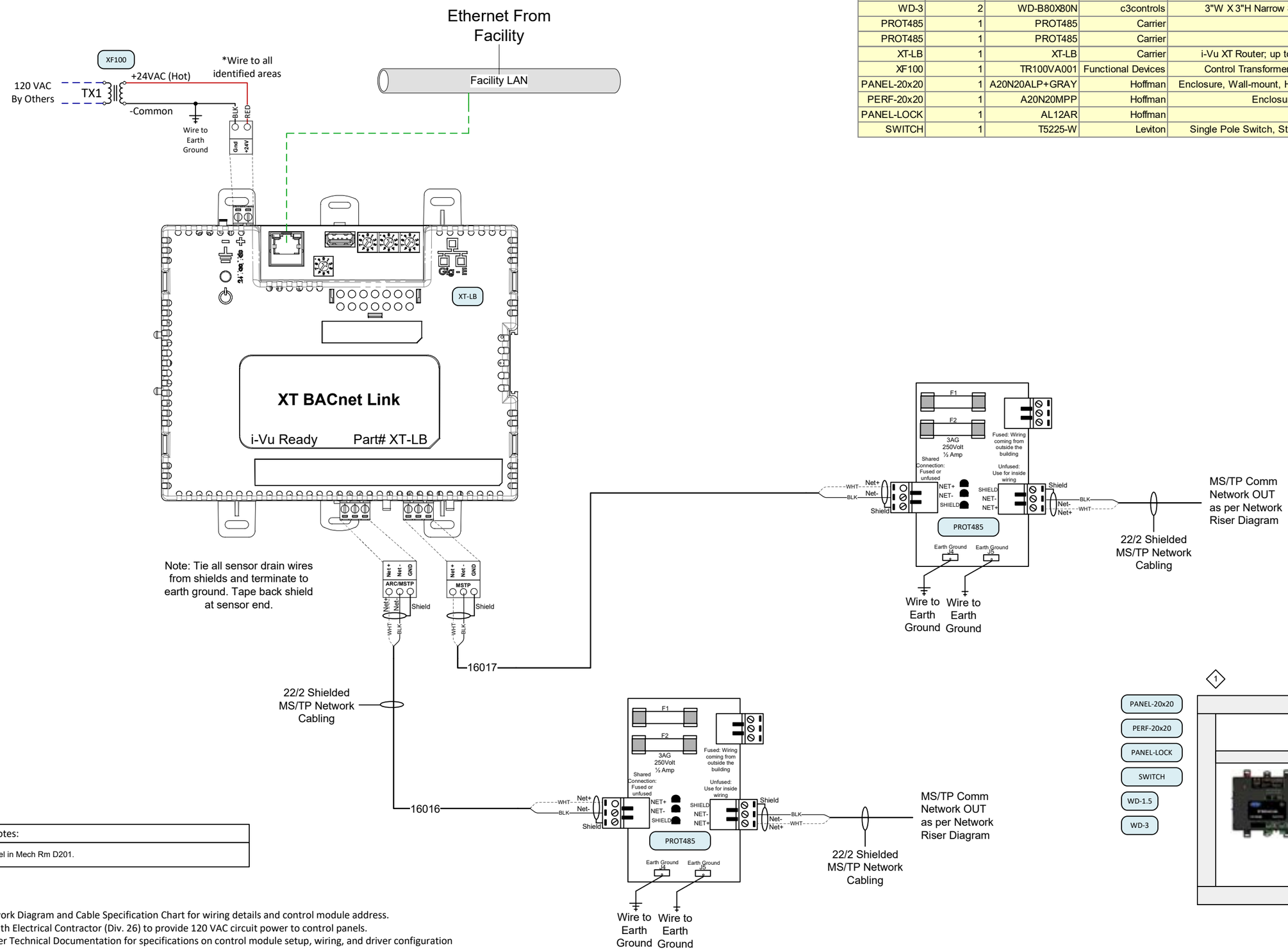


## Bill of Materials

| DID | Quantity | Part # | Manufacturer | Description |
|---|---|---|---|---|
| WD-1.5 | 1 | WD-B40X80N | c3controls | 1 1/2"W X 3"H Narrow Slot, Wiring Duct & Cover, 1pc, 6ft |
| WD-3 | 2 | WD-B80X80N | c3controls | 3"W X 3"H Narrow Slot, Wiring Duct & Cover, 1pc, 6ft |
| PROT485 | 1 | PROT485 | Carrier | Network Protection Board |
| PROT485 | 1 | PROT485 | Carrier | Network Protection Board |
| XT-LB | 1 | XT-LB | Carrier | i-Vu XT Router; up to 60 controllers on BACnet MS/TP |
| XF100 | 1 | TR100VA001 | Functional Devices | Control Transformer (120 VAC Input - 24 VAC Output) |
| PANEL-20x20 | 1 | A20N20ALP+GRAY | Hoffman | Enclosure, Wall-mount, Hinged, Steel, NEMA1, 20"x20"x6" |
| PERF-20x20 | 1 | A20N20MPP | Hoffman | Enclosure, Perforated Back Plate, 20"x20" |
| PANEL-LOCK | 1 | AL12AR | Hoffman | Enclosure Key Lock Kit |
| SWITCH | 1 | T5225-W | Leviton | Single Pole Switch, Standard Receptacle; Self-grounding |

| Key Drawing Notes: | |
|---|---|
| 1 | Locate panel in Mech Rm D201. |

General Notes:
1. Refer to Network Diagram and Cable Specification Chart for wiring details and control module address.
2. Coordinate with Electrical Contractor (Div. 26) to provide 120 VAC circuit power to control panels.
3. Refer to Carrier Technical Documentation for specifications on control module setup, wiring, and driver configuration

Network Router 2

DWG # 1.6.2

JOB # VWPW

NISD Village at West Pointe West ES

San Antonio, TX

Drawn:
ENG: Dennis Schnellman

| REV # | DESCRIPTION | DATE |
|---|---|---|
| 0 | SUBMITTED | 4/28/2023 |


Yates Co
4738 Whirlwind Dr.
San Antonio, TX 78217
Phone: 2107023820

# NISD Village at West Pointe West ES
# VWPW

See next page for bill of materials

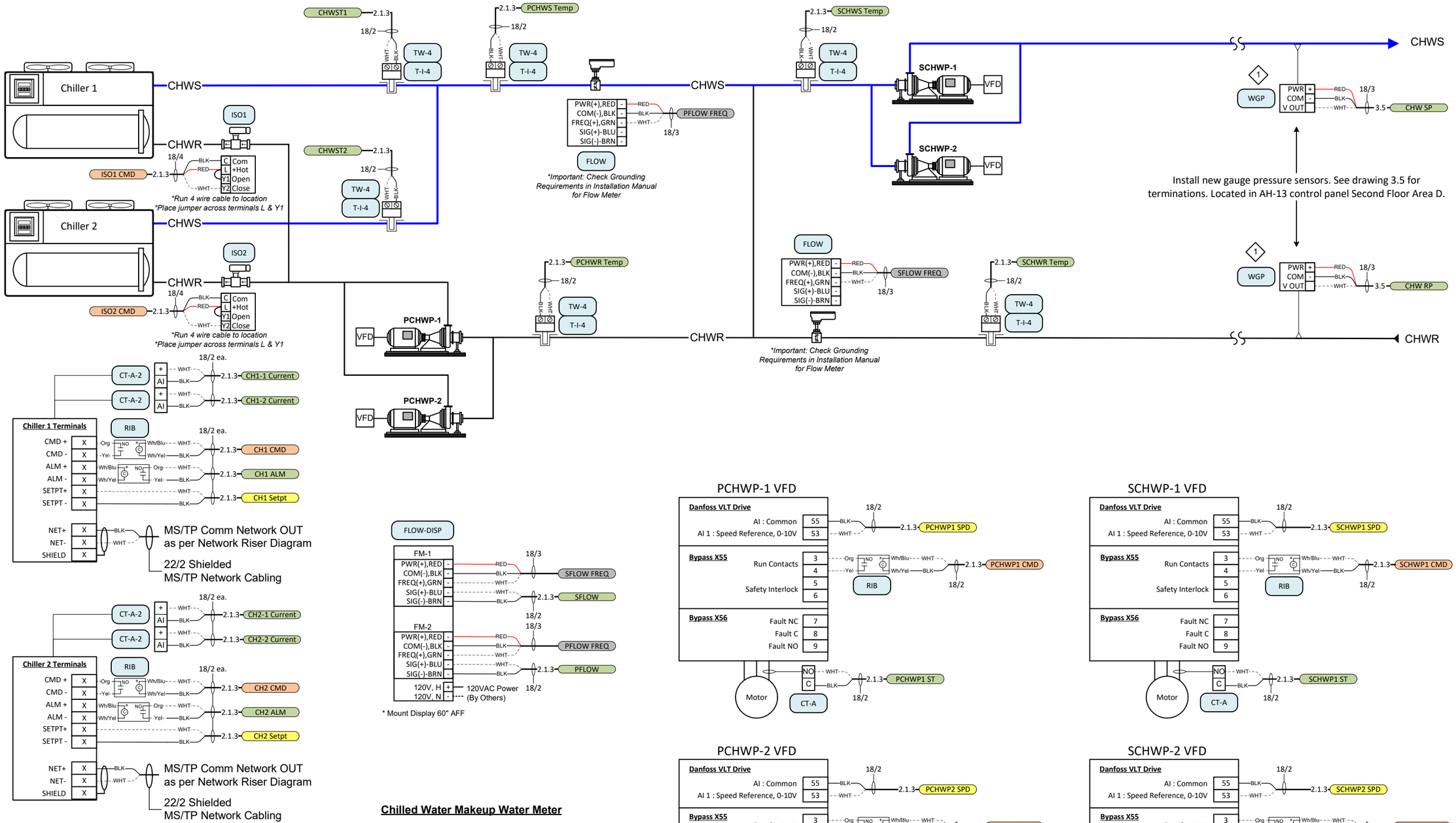


| Key Drawing Notes: | |
|---|---|
| 1 | Located at remote module. See Dwg. 3.5. |

General Notes:
1. Refer to Network Diagram and Cable Specification Chart for wiring details and control module address.
2. Coordinate with Electrical Contractor (Div. 26) to provide 120 VAC circuit power to control panels.
3. Refer to Carrier Technical Documentation for specifications on control module setup, wiring, and driver configuration

Chilled Water System
Control Type 32

DWG # 2.1.1

JOB # VWPW

NISD Village at West Pointe West ES

San Antonio, TX

| REV # | DESCRIPTION | DATE |
|---|---|---|
| 0 | SUBMITTED | 4/28/2023 |

Drawn: ENG: Dennis Schnellman


Yates Co
4738 Whirlwind Dr.
San Antonio, TX 78217
Phone: 2107023820

# NISD Village at West Pointe West ES
# VWPW

## Fire Alarm Monitoring

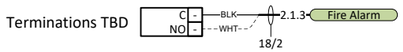


## Phase Loss

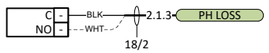


## Building Electric Meter

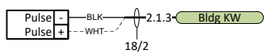


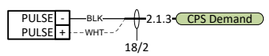


## Electrical Switchboard

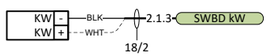


## Transfer Switch

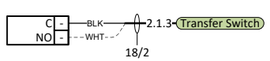


## Generator Status

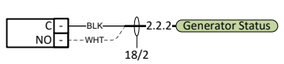


## Building Domestic Water Meter

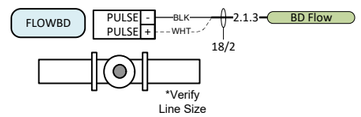


## Site Irrigation Water Meter

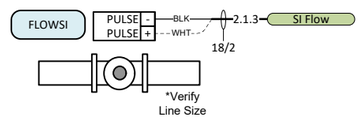


## Bill of Materials

| DID | Quantity | Part # | Manufacturer | Description |
|---|---|---|---|---|
| CT-A | 4 | A/MSCS-A | ACI | Current Switch, Split Core, NO, 0 to 150A Range, Adj. Trip Point |
| T-I-4 | 6 | BA/10K-2-I-4"-BB2 | BAPI | Immersion, 10K-2 Thermistor, 4" (no well) |
| TW-4 | 6 | BA/4"M316 | BAPI | Immersion Temp Sensor Thermowell, 4", 316 SS |
| WGP | 2 | 628-12-CB-P9-E1-S8-LCD | Dwyer | Wet Gauge Pressure Transducer, 0-200 PSI, 0-5/10 VDC |
| FLOWMU | 1 | WNT-A-C-07-1 | Dwyer | Water Flow Meter, Multi-Jet NSF Certified, 1.5" |
| RIB | 8 | RIBU1C | Functional Devices | Enclosed Relay 10 Amp SPDT, 10-30VDC/VDC or 120 VAC Coil |
| FLOW-DISP | 1 | D-1202-22020 | Onicon | Water Flow Meter Display Dual Meter |
| FLOW | 2 | F-1210 | Onicon | Water Flow Meter |
| ISO1 | 1 | See Valve Schedule | See Valve Schedule | Control Valve |
| ISO2 | 1 | See Valve Schedule | See Valve Schedule | Control Valve |
| CT-A-2 | 4 | H221SP | Veris | Current Transducer, 100-300 A Input, 4-20 mA Output, Split-Core |
| FLOWBD | 1 | FT-T## | Badger | Badger Meter Recordall Turbo Series Flow Meters |
| FLOWSI | 1 | FT-T## | Badger | Badger Meter Recordall Turbo Series Flow Meters |

**SEQUENCE - ELECTRICAL EQUIPMENT MONITORING:**

A. DEMAND LIMITING: ELECTRICAL SERVICES SHALL BE EQUIPPED WITH PULSE TRANSDUCER ACCESSORY TO THE CPS BILLING METER. PROVIDE CONDUIT WITH 4 EACH #12 AWG CONDUCTORS FROM THIS TRANSDUCER TO AN EMS PANEL. DEMAND LIMITING SHALL BE PROGRAMMED INTO THE EMS TO RESET CHILLED WATER TEMPERATURE. SEE CHILLER CONTROL SEQUENCE.

B. PHASE FAILURE PROTECTION: ALL 3-PHASE EQUIPMENT SHALL HAVE NON-EMS OVER/UNDER VOLTAGE AND PHASE LOSS PROTECTION PROVIDED UNDER DIVISION 16. SITE POWER SOURCE SHALL BE MONITORED FOR OVER/UNDER VOLTAGE AND PHASE LOSS BY EMS, AND AN OCCURRENCE OF SAME SHALL ALARM THE EMS.

C. KW MONITORING: CONTINUOUSLY MONITOR, AND LOG KW/KWH FOR THE SITE POWER SOURCE AND EACH OF THE MAIN SWITCHBOARDS. THE POWER CONSUMPTION SHALL BE LOGGED AND TOTALIZED.

D. EMERGENCY GENERATOR: CONTINUOUSLY MONITOR THE EMERGENCY GENERATOR AND THE TRANSFER SWITCH. THE STATUS OF THE GENERATOR AND THE MODE OF THE TRANSFER SWITCH (NORMAL OR EMERGENCY) SHALL BE MONITORED. WHEN THE SYSTEM IS IN EMERGENCY THE EMS SHALL BE ALARMED.

E. DDC POINT SCHEDULE:

| | | | |
|---|---|---|---|
| SITE POWER PHASE LOSS | 1 EACH DI | GENERATOR STATUS | 1 EACH DI |
| CPS DEMAND PULSE | 1 EACH AI | TRANSFER SWITCH MODE | 1 EACH DI |
| SITE KW | 1 EACH AI | CAMPUS FIRE ALARM | 1 EACH DI |
| SWITCHBOARD KW | 1 EACH AI PER SWBD | | |

**SEQUENCE - WATER METERING:**

1. PROVIDE MONITORING AND TOTALIZING OF THE DOMESTIC WATER METER AT THE BUILDING SERVICE ENTRANCE. EMS SHALL ALARM IF THE FLOW EXCEEDS ALARM SETPOINT IN EXCESS OF *15 MINUTES.

2. PROVIDE MONITORING AND TOTALIZING OF THE IRRIGATION SUPPLY METER AT THE IRRIGATION SOURCE. EMS SHALL ALARM IF THE FLOW EXCEEDS ALARM SETPOINT IN EXCESS OF *15 MINUTES.

3. PROVIDE MONITORING AND TOTALIZING OF THE INTERIOR WATER METERS LISTED BELOW. EMS SHALL ALARM IF THE FLOW EXCEEDS THE ALARM SETPOINT IN EXCESS OF *15 MINUTES (INDIVIDULLY ADJUSTABLE FOR EACH METER).

| | | |
|---|---|---|
| A. | BUILDING DOMESTIC WATER: | FLOW ALARM SETPOINT: *150 GPM. |
| B. | CHILLED WATER MAKE-UP: | FLOW ALARM SETPOINT: *50 GPM. |
| C. | HEATING WATER MAKE-UP: | FLOW ALARM SETPOINT: *50 GPM. |
| D. | IRRIGATION WATER METERS, EACH: | FLOW ALARM SETPOINT: *75 GPM. |

4. DDC POINT SCHEDULE: METER FLOW 1 EACH AI PER METER

General Notes:
1. Refer to Network Diagram and Cable Specification Chart for wiring details and control module address.
2. Coordinate with Electrical Contractor (Div. 26) to provide 120 VAC circuit power to control panels.
3. Refer to Carrier Technical Documentation for specifications on control module setup, wiring, and driver configuration

Misc Controls
Control Type 19 & 20
DWG # 2.1.2
JOB # VWPW

NISD Village at West Pointe West ES
San Antonio, TX

Drawn:
ENG: Dennis Schnellman

| REV # | DESCRIPTION | DATE |
|---|---|---|
| 1 | Revision 1 | 8/14/2023 |
| 0 | SUBMITTED | 4/28/2023 |


Yates Co
4738 Whirlwind Dr.
San Antonio, TX 78217
Phone: 2107023820

# NISD Village at West Pointe West ES
# VWPW

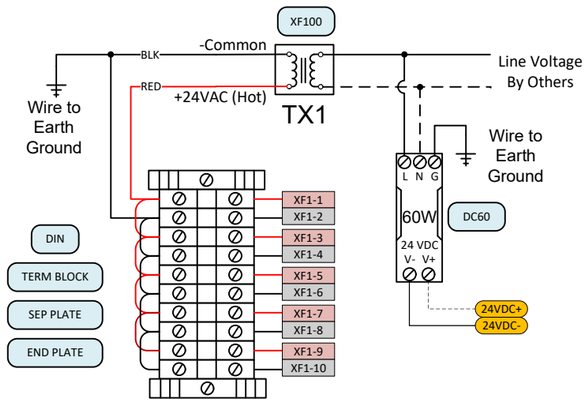


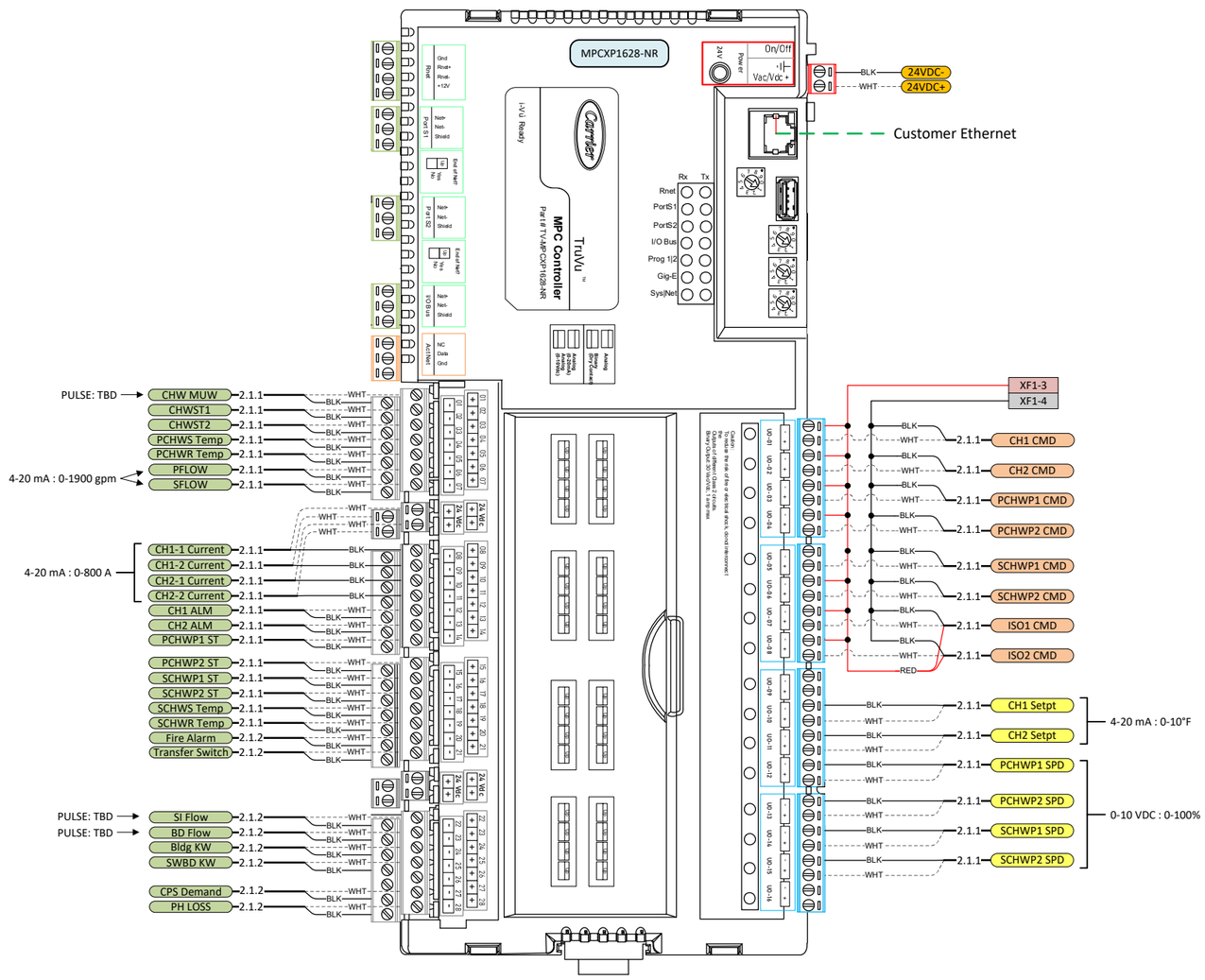


## Bill of Materials

| DID | Quantity | Part # | Manufacturer | Description |
|---|---|---|---|---|
| WD-1.5 | 3 | WD-B40X80N | BAPI | 1 1/2"W X 3"H Narrow Slot, Wiring Duct & Cover, 1pc, 6ft |
| DIN | 1 | DRMR3 | c3controls | DIN Rail, Slotted, 1 m Length, 35 mm Width x 7.5 mm, Plated Steel |
| SEP PLATE | 1 | WTB2-EB | c3controls | Separator Plates (50 pack), 8 mm, Fits 35 mm DIN Rail, Grey Non-metallic |
| END PLATE | 1 | WTB2-EPW2/4 | c3controls | Separator Plates (50 pack), 8 mm, Fits 35 mm DIN Rail, Grey Non-metallic |
| TERM BLOCK | 10 | WTB2-W2 | c3controls | Terminal Block, 5 mm width, DIN-mount |
| MPCXP1628-NR | 1 | TV-MPCXP1628-NR | Carrier | TruVu MPCXP (28 UI, 16 UO); up to (9) MPC XPIO expanders; 200 Modbus; 1500 TPI BACnet |
| XF100 | 1 | TR100VA001 | Functional Devices | Control Transformer (120 VAC Input - 24 VAC Output) |
| PANEL-24x24 | 1 | A24N24ALP+GRAY | Hoffman | Enclosure, Wall-mount, Hinged, Steel, NEMA1, 24"x24"x6" |
| PERF-24x24 | 1 | A24N24MPP | Hoffman | Enclosure, Perforated Back Plate, 24"x24" |
| PANEL-LOCK | 1 | AL12AR | Hoffman | Enclosure Key Lock Kit |
| DC60 | 1 | PS5R-VD24 | IDEC | 120VAC:24VDC Power Supply; 60W, 2.5A |
| SWITCH | 1 | T5225-W | Leviton | Single Pole Switch, Standard Receptacle; Self-grounding |

## Active Points List

| Point Number | Point Type | Point Name | Setup |
|---|---|---|---|
| UI-01 | DI | CHW Makeup | Pulse |
| UI-02 | AI | CH1 Supply Temp | Therm |
| UI-03 | AI | CH2 Supply Temp | Therm |
| UI-04 | AI | PCHWS Temp | Therm |
| UI-05 | AI | PCHWR Temp | Therm |
| UI-06 | AI | Primary CHW Flow | mA |
| UI-07 | AI | Secondary CHW Flow | mA |
| UI-08 | AI | CH1 Circ 1 Current | mA |
| UI-09 | AI | CH1 Circ 2 Current | mA |
| UI-10 | AI | CH2 Circ 1 Current | mA |
| UI-11 | AI | CH2 Circ 2 Current | mA |
| UI-12 | DI | CH1 Alarm | DC |
| UI-13 | DI | CH2 Alarm | DC |
| UI-14 | AI | PCHWP1 Status | DC |
| UI-15 | AI | PCHWP2 Status | DC |
| UI-16 | AI | SCHWP1 Status | DC |
| UI-17 | AI | SCHWP2 Status | DC |
| UI-18 | AI | SCHWS Temp | Therm |
| UI-19 | AI | SCHWR Temp | Therm |
| UI-20 | DI | Fire Alarm | DC |
| UI-21 | DI | Transfer Switch | DC |
| UI-22 | AI | Site Irrigation Flow | mA |
| UI-23 | AI | Bldg Domestic Flow | mA |
| UI-24 | DI | Bldg kW | Pulse |
| UI-25 | AI | Switchboard MSA kW | Pulse |
| UI-27 | DI | CPS Demand | Pulse |
| UI-28 | DI | Phase Loss | DC |
| UO-1 | DO | CH1 Command | Relay |
| UO-2 | DO | CH2 Command | Relay |
| UO-3 | DO | PCHWP1 Command | Relay |
| UO-4 | DO | PCHWP2 Command | Relay |
| UO-5 | DO | SCHWP1 Command | Relay |
| UO-6 | DO | SCHWP2 Command | Relay |
| UO-7 | DO | CH1 Isolation Valve | Relay |
| UO-8 | DO | CH2 Isolation Valve | Relay |
| UO-10 | AO | CH1 Setpt Reset | V |
| UO-11 | AO | CH2 Setpt Reset | V |
| UO-12 | AO | PCHWP1 Speed | V |
| UO-13 | AO | PCHWP2 Speed | V |
| UO-14 | AO | SCHWP1 Speed | V |
| UO-15 | AO | SCHWP2 Speed | V |

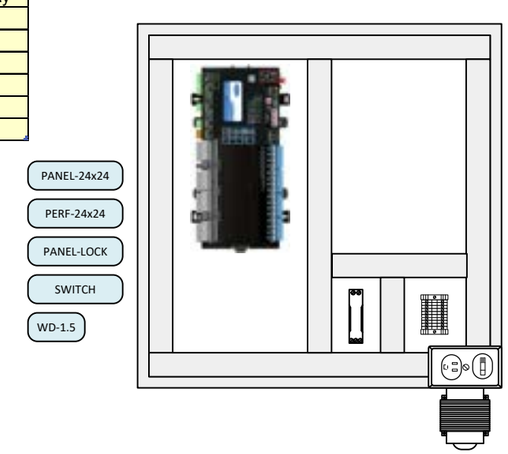


General Notes:
1. Refer to Network Diagram and Cable Specification Chart for wiring details and control module address.
2. Coordinate with Electrical Contractor (Div. 26) to provide 120 VAC circuit power to control panels.
3. Refer to Carrier Technical Documentation for specifications on control module setup, wiring, and driver configuration

CHWS Panel Details
Control Type 32
DWG # 2.1.3
JOB # VWPW

NISD Village at West Pointe West ES
San Antonio, TX

Drawn:
ENG: Dennis Schnellman

| REV # | DESCRIPTION | DATE |
|---|---|---|
| 0 | SUBMITTED | 4/28/2023 |


Yates Co
4738 Whirlwind Dr.
San Antonio, TX 78217
Phone: 2107023820

**SEQUENCE - CENTRAL PLANT COOLING:** TWO PARALLEL AIR COOLED CHILLERS, TWO PRIMARY PUMPS, AND TWO SECONDARY ZONE PUMPS

A. PROVIDE THIS CONTROL TYPE FOR CHILLERS MARK CH-1 AND CH-2; PRIMARY CHILLED WATER PUMPS CP-1 AND CP-2; AND SECONDARY CHILLED WATER PUMPS ZP-1 AND ZP-2.

**B.** OPERATIONAL SEQUENCE:

B.1 AT START-UP AS CONTROLLED BY DEMAND FROM ANY AIR HANDLER AUTHORIZED TO START CENTRAL PLANT COOLING.

B.2 IF OUTSIDE AIR TEMPERATURE IS BELOW *45F DEGREES, THEN INITIATE A CENTRAL PLANT COOLING ALARM.

B.3 IF THE OUTSIDE AIR TEMPERATURE IS ABOVE *45F DEGREES, CENTRAL PLANT COOLING SHALL BE ACTIVATED BY A CALL FOR COOLING FROM ANY "SCHEDULED ON" AIR HANDLING UNIT (AHU) AUTHORIZED TO ACTIVATE THE CENTRAL PLANT COOLING. ACTIVATION OF THE CENTRAL PLANT COOLING WILL BE AS FOLLOWS:

a. LEAD CHILLER ISOLATION VALVE SHALL BE OPENED AND LEAD PRIMARY PUMP SHALL BE ENERGIZED AT FULL FLOW (IN THAT SEQUENCE). IF PUMP FAILS, AS INDICATED BY ITS CT, IT SHALL DE-ENERGIZE AND ALARM, THE NEXT PRIMARY PUMP SHALL ENERGIZE AT FULL FLOW.

b. LEAD CHILLER SHALL ENERGIZE AFTER FLOW IS VERIFIED, AND MAINTAIN LEAVING WATER TEMPERATURE IN ACCORD WITH THE CHILLED WATER SUPPLY TEMPERATURE RESET SCHEDULE:

| OA TEMP | CHILLED WATER SUPPLY TEMP |
|---|---|
| *80F | *42F DEGREES |
| *60F | *45F DEGREES |

c. LEAD SECONDARY PUMP SHALL BE ENERGIZED AND ITS VFD SHALL MODULATE AS REQUIRED TO MAINTAIN A *7 PSI DIFFERENTIAL NEAR THE END OF THE SECONDARY LOOP WITH THE LOWEST DIFFERENTIAL PRESSURE. IF PUMP FAILS (NOT OPERATING WHEN SCHEDULED), DE-ENERGIZE LEAD SECONDARY PUMP AND ENERGIZE LAG SECONDARY PUMP. ONLY ONE SECONDARY PUMP SHALL BE ALLOWED TO OPERATE AT A TIME.

d. IF *46F DEGREE CHILLED WATER SUPPLY TEMPERATURE IS NOT ACHIEVED AFTER *5 MINUTES, LAG CHILLER ISOLATION VALVE SHALL BE OPENED AND LAG PRIMARY PUMP SHALL BE ENERGIZED. LAG CHILLER SHALL ENERGIZE AFTER FLOW IS VERIFIED, AND MAINTAIN LEAVING WATER TEMPERATURE IN ACCORD WITH THE CHILLED WATER SUPPLY TEMPERATURE RESET SCHEDULE (SEE ABOVE).

e. AFTER *45F DEGREE CHILLED WATER SUPPLY TEMPERATURE IS ACHIEVED OR *30 MINUTES AFTER STARTUP, THE PRIMARY PUMPS AND CHILLERS SHALL BE CONTROLLED AS FOLLOWS:

1) ANYTIME THE PLANT LOAD EXCEEDS *80% OF THE LEAD CHILLER'S CAPACITY FOR *5 MINUTES OR THE CHILLED WATER RETURN TEMPERATURE EXCEEDS *55F DEGREES, AN ADDITIONAL PRIMARY PUMP SHALL ENERGIZE AT FULL FLOW AND ITS ISOLATION VALVE SHALL OPEN, AND AFTER VERIFIED FLOW AN ADDITIONAL CHILLER SHALL ENERGIZE (IN THAT SEQUENCE).

2) ANYTIME THE CHILLED WATER RETURN TEMPERATURE IS BELOW *55F DEGREES AND THE PLANT LOAD IS LESS THAN *40% OF THE LEAD CHILLER'S CAPACITY FOR *15 MINUTES, THE LAG CHILLER SHALL DE-ENERGIZED. *3 MINUTES LATER ITS ISOLATION VALVE SHALL CLOSE AND ITS PRIMARY PUMP SHALL DE-ENERGIZE (IN THAT SEQUENCE).

f. IF A CHILLER HAS ONE ALARM, IT SHALL BECOME THE LAG CHILLER. IF A CHILLER HAS TWO ALARMS, IT SHALL BE DE-ENERGIZED. *3 MINUTES LATER, ITS ISOLATION VALVE SHALL CLOSE AND ITS PRIMARY PUMP SHALL BE DE-ENERGIZED (IN THAT SEQUENCE). THE CHILLER SHALL BE LOCKED OUT OF THE OPERATIONAL SEQUENCE AND SHALL ALARM THE CONTROLS.

g. PLANT LOAD SHALL BE CALCULATED FROM PRIMARY LOOP FLOW (GPM) AND PRIMARY LOOP TEMPERATURE DIFFERENCE. THIS VALUE SHALL BE COMPARED TO SECONDARY LOOP FLOW (GPM) AND SECONDARY LOOP TEMPERATURE DIFFERENCE FOR ACCURACY.

B.4 AT SHUTDOWN:

a. CHILLERS SHALL BE DE-ENERGIZED AT SCHEDULED SHUT-DOWN.

b. ALL PUMPS SHALL DE-ENERGIZE AND ISOLATION VALVES SHALL CLOSE (IN THAT SEQUENCE) *3 MINUTES AFTER LAST CHILLER IS DE-ENERGIZED.

B.5 PRIMARY PUMP OPERATION: EACH PRIMARY PUMP WILL NORMALLY BE DEDICATED TO A SPECIFIC CHILLER (EX. CH-1 AND CP-1); HOWEVER, IF FAILURES OCCUR, THE EMS OPERATOR SHALL HAVE THE CAPABILITY TO RE-ASSIGN THE DEDICATED PUMP/CHILLER RELATIONSHIP. PRIMARY PUMP VSD'S ARE FOR SOFT START ONLY - NO MODULATION.

B.6 LOW LOAD CYCLING: TO PREVENT SHORT-CYCLING, IF THE LAST CHILLER ON-LINE CYCLES OFF ON LOW LOAD BY ITS FACTORY CONTROLS, THE EMS SHALL RECOGNIZE THIS BY MONITORING EXTERNAL CT'S ON EACH CHILLER'S TOTAL POWER AND NOT ALLOW A CHILLER TO RE-ENERGIZED UNTIL THE RETURN WATER TEMPERATURE RISES TO *55F DEGREES. PRIMARY AND SECONDARY PUMPS SHALL REMAIN ENERGIZED AND ISOLATION VALVES SHALL REMAIN OPEN.

B.7 LEAD/LAG ROTATION: PROVIDE A WEEKLY (2:00AM SUNDAY) LEAD/LAG ROTATION OF CHILLERS, PRIMARY PUMPS, AND SECONDARY PUMPS.

B.8 PUMP PROTECTION: ANYTIME A PRIMARY PUMP IS ENERGIZED AS INDICATED BY ITS C AND NO CHILLER ISOLATION VALVE IS OPEN, EMS SHALL ALARM AND OPEN ALL CHILLER ISOLATION VALVES (TO PROTECT A PUMP IF PLACED IN THE HAND POSTION WITH THE SYSTEM OFF).

B.9 FREEZE PROTECTION: ANYTIME THE OUTSIDE AIR TEMPERATURE FALLS BELOW *36F DEGREES, ALL CHILLER ISOLATION VALVES SHALL OPEN AND ALL PUMPS, EXCEPT THE LAG SECONDARY PUMP SHALL BE ENERGIZED. IF THE LEAD SECONDARY PUMP FAILS TO START, THE LAG PUMP SHALL START.

B.10 DEMAND LIMITING:

a. IF DEMAND EXCEEDS *750 KVA FOR *5 MINUTES CONTINUOUS, RESET LEAVING WATER TEMP FOR ALL CHILLERS UP *2F DEGREES WARMER EVERY *2 MINUTES (MAXIMUM *47F DEGREES) UNTIL KVA SETPOINT IS REACHED. WHEN KVA RETURNS TO BELOW SETPOINT, THE LEAVING CHILLED WATER TEMPERATURE SHALL BE RESET DOWN *2F DEGREES EVERY *2 MINUTES UNTIL THE LEAVING WATER TEMPERATURE SETPOINT IS REACHED (IN ACCORD WITH THE RESET SCHEDULE).

b. IF NO DEMAND PULSE IS BEING RECEIVED, RESET LEAVING WATER TEMPERATURE FOR ALL CHILLERS TO *47F DEGREES AND REMAIN THERE UNTIL THE KVA PULSE RETURNS (NO PULSE WILL BE AVAILABLE FOR APPROXIMATELY 30 MINUTES WHILE CPS IS CHECKING THE METER).

B.11 CHILLER INTERFACE: CHILLER MANUFACTURER'S CHILLER-TO-EMS INTERFACE CARD(S) SHALL BE MOUNTED IN EACH CHILLER. PROVIDE REQUIRED RACEWAY, CONDUCTORS, TERMINATIONS, ETC FROM THE CHILLERS TO CONTROL PANEL(S) IN CENTRAL PLANT, AS REQUIRED FOR PROPER INTERFACE.

C. DDC POINT SCHEDULE:

| | |
|---|---|
| PRIMARY PUMP START/STOP | 1 EACH DO EACH PUMP |
| PRIMARY PUMP CURRENT DETECTOR | 1 EACH DI EACH PUMP |
| PRIMARY PUMP SPEED | 1 EACH AO EACH PUMP |
| CHILLER ISOLATION VALVE | 1 EACH DO EACH CHILLER |
| CHILLER ENABLE-DISABLE | 1 EACH DO EACH CHILLER |
| CHILLER CURRENT TRANSFORMER (CT) | 1 EACH AI EACH CIRCUIT |
| CHILLER FACTORY ALARMS | 1 EACH DI EACH CHILLER |
| CHILLER SUPPLY WATER TEMPERATURE RESET | 1 EACH AO EACH CHILLER |
| CHILLER SUPPLY WATER TEMPERATURE | 1 EACH AI EACH CHILLER |
| COMBINED PRIMARY LOOP SUPPLY TEMPERATURE | 1 EACH AI |
| PRIMARY LOOP RETURN TEMPERATURE | 1 EACH AI |
| PRIMARY CHILLED WATER LOOP FLOW (GPM) | 1 EACH AI |
| SECONDARY LOOP RETURN TEMPERATURE | 1 EACH AI |
| REMOTE COIL UPSTREAM PRESSURE | 1 EACH AI EACH LOOPE |
| REMOTE COIL DOWNSTREAM PRESSURE | 1 EACH AI EACH LOOP |
| SECONDARY CHILLED WATER LOOP FLOW (GPM) | 1 EACH AI |
| SECONDARY LOOP PUMP START/STOP | 1 EACH DO EACH PUMP |
| SECONDARY LOOP PUMP SPEED | 1 EACH AO EACH PUMP |
| SECONDARY LOOP PUMP CT | 1 EACH AI EACH PUMP |
| SECONDARY LOOP SUPPLY TEMPERATURE | 1 EACH AI |
| KVA INPUT (NOTE 1) | 1 EACH AI |

NOTES: (1) REQUIRES A KVA PULSE FROM CPS DEMAND MONITOR (PULSE INITIATOR). THIS INTERFACE IS A COST ITEM AVAILABLE FROM CPS.

D. MINIMUM BACNET INTERFACE POINTS TO BE DISPLAYED ON EMS FOR EACH CHILLER:

CHILLED WATER SUPPLY TEMPERATURE SETPOINT
CHILLED WATER SUPPLY TEMPERATURE
CHILLED WATER RETURN TEMPERATURE
VSD INTERNAL AMBIENT TEMPERATURE (IF APPLICABLE)
VSD OUTPUT FREQUENCY (IF APPLICABLE)
EACH COMPRESSOR SUCTION TEMPERATURE
EACH COMPRESSOR DISCHARGE TEMPERATURE
EACH COMPRESSOR OIL TEMPERATURE
EACH COMPRESSOR OIL PRESSURE
EACH COMPRESSOR % OF FULL LOAD
EACH CHILLER % OF FULL LOAD
EACH COMPRESSOR SUCTION SUPERHEAT
5 ADDITIONAL POINTS DEPENDENT ON CHILLER MANUFACTURER

CHWS Sequence
Control Type 32

DWG # 2.1.4
JOB # VWPW

NISD Village at West Pointe West ES
San Antonio, TX

| REV # | DESCRIPTION | DATE |
|---|---|---|
| 1 | Revision 1 | 8/14/2023 |
| 0 | SUBMITTED | 4/28/2023 |

Drawn:
ENG: Dennis Schnellman

Yates Co
4738 Whirlwind Dr.
San Antonio, TX 78217
Phone: 2107023820

# NISD Village at West Pointe West ES
# VWPW

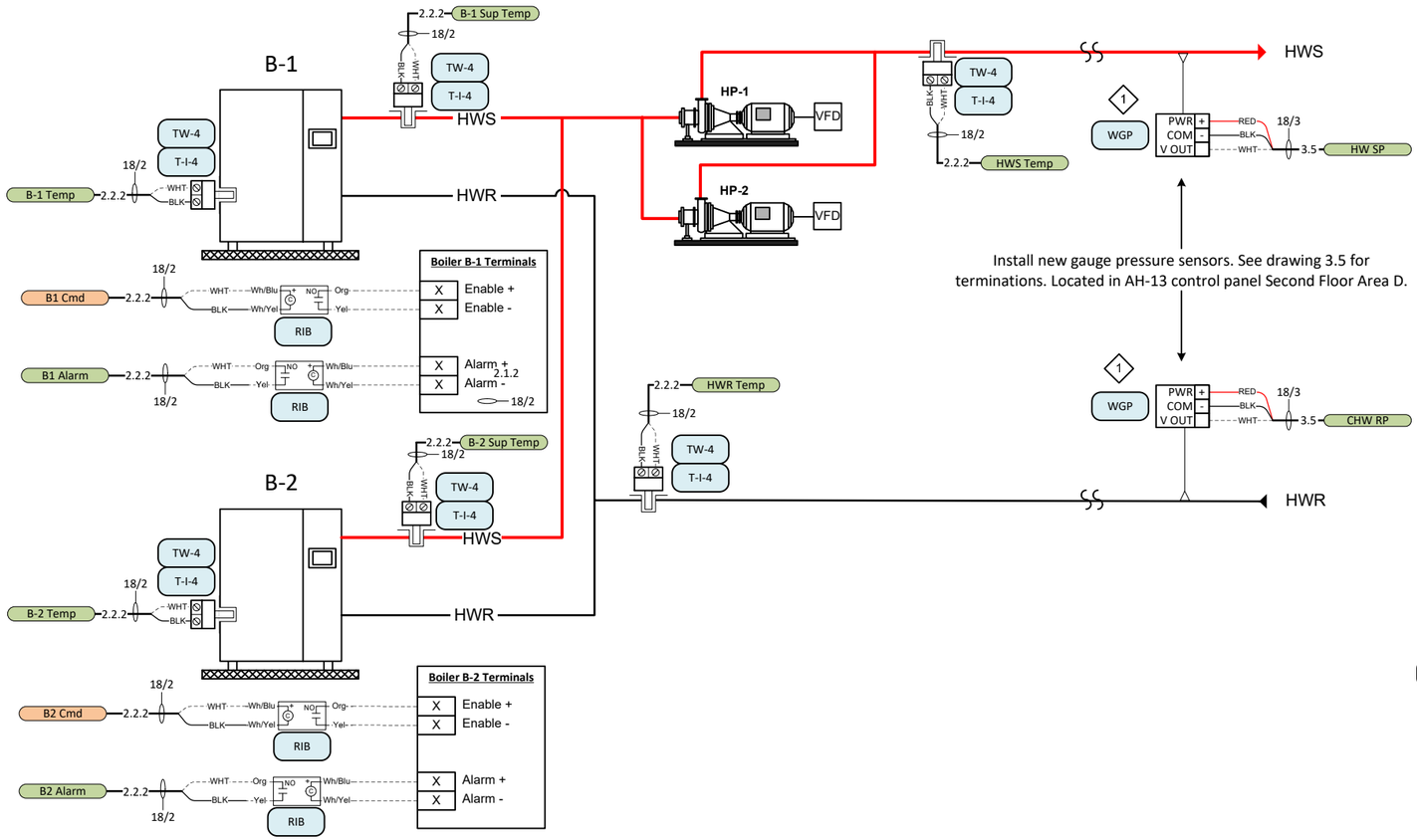


Install new gauge pressure sensors. See drawing 3.5 for terminations. Located in AH-13 control panel Second Floor Area D.

Field verify the CO sensor is interlocked to shut down boilers upon loss of power to the CO sensor.

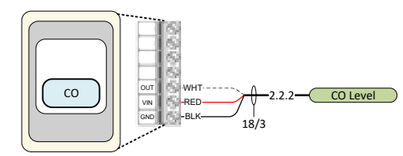


***CO Sensor Model CGM-505 provided by Boiler Equipment Supplier***

**Hot Water Makeup Water Meter**

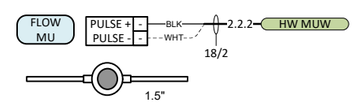


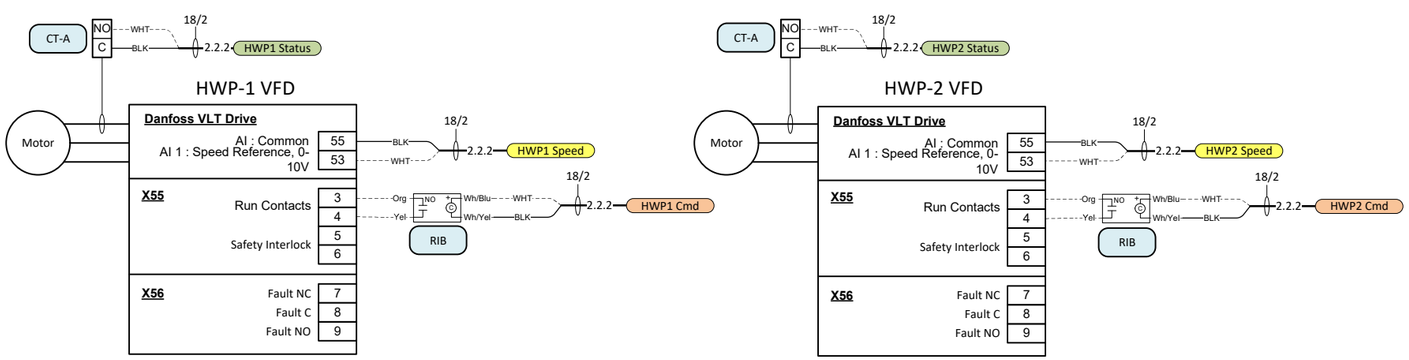


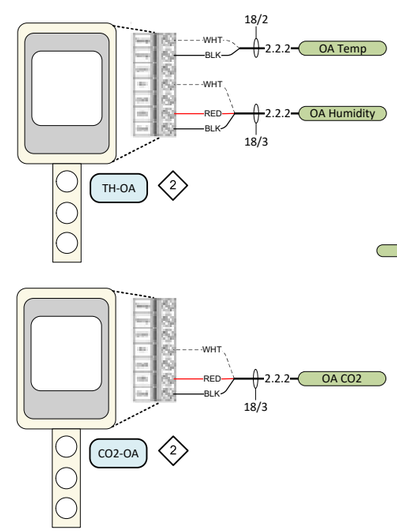


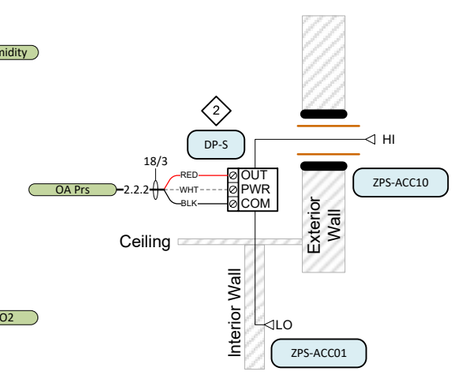


General Notes:
1. Refer to Network Diagram and Cable Specification Chart for wiring details and control module address.
2. Coordinate with Electrical Contractor (Div. 26) to provide 120 VAC circuit power to control panels.
3. Refer to Carrier Technical Documentation for specifications on control module setup, wiring, and driver configuration

| Key Drawing Notes: | |
|---|---|
| 1 | Located at remote module. See Dwg. 3.5. |
| 2 | Locate on exterior wall per plans. |

**Bill of Materials**

| DID | Quantity | Part # | Manufacturer | Description |
|---|---|---|---|---|
| CT-A | 2 | A/MSCS-A | ACI | Current Switch, Split Core, NO, 0 to 150A Range, Adj. Trip Point |
| TH-OA | 1 | BA/10K-2-H200-O-BB2 | BAPI | Outside Air Temp/Humidity Combo, 0-5/10 VDC/4-20mA, 2% |
| T-I-4 | 6 | BA/10K-2-I-4"-BB2 | BAPI | Immersion, 10K-2 Thermistor, 4" (no well) |
| TW-4 | 6 | BA/4"M316 | BAPI | Immersion Temp Sensor Thermowell, 4", 316 SS |
| CO2-OA | 1 | BA/DCD05-V-BB | BAPI | Outside Air CO2 Transmitter, 0-5VDC, +/-5% FS |
| DP-S | 1 | BA/ZPM-LR-NT-D | BAPI | Static Pressure, 0-0.1/0.25/0.5/0.75/1 "wc, 0-5/10 VDC, 4-20 mA, +/-0.25% |
| ZPS-ACC01 | 1 | BA/ZPS-ACC01 | BAPI | Space Static Pressure Wall Plate |
| ZPS-ACC10 | 1 | BA/ZPS-ACC10 | BAPI | Outdoor pressure port, side mount |
| WGP | 2 | 628-12-CB-P9-E1-S8-LCD | Dwyer | Wet Gauge Pressure Transducer, 0-200 PSI, 0-5/10 VDC |
| FLOWMU | 1 | WNT-A-C-07-1 | Dwyer | Water Flow Meter, Multi-Jet NSF Certified, 1.5" |
| RIB | 6 | RIBU1C | Functional Devices | Enclosed Relay 10 Amp SPDT, 10-30VDC/VDC or 120 VAC Coil |

Hot Water System
Control Type 33

DWG # 2.2.1
JOB # VWPW

NISD Village at West Pointe West ES
San Antonio, TX

| REV # | DESCRIPTION | DATE |
|---|---|---|
| 1 | Revision 1 | 8/11/2023 |
| 0 | SUBMITTED | 4/28/2023 |

Drawn:
ENG: Dennis Schnellman


Yates Co
4738 Whirlwind Dr.
San Antonio, TX 78217
Phone: 2107023820

# NISD Village at West Pointe West ES
# VWPW

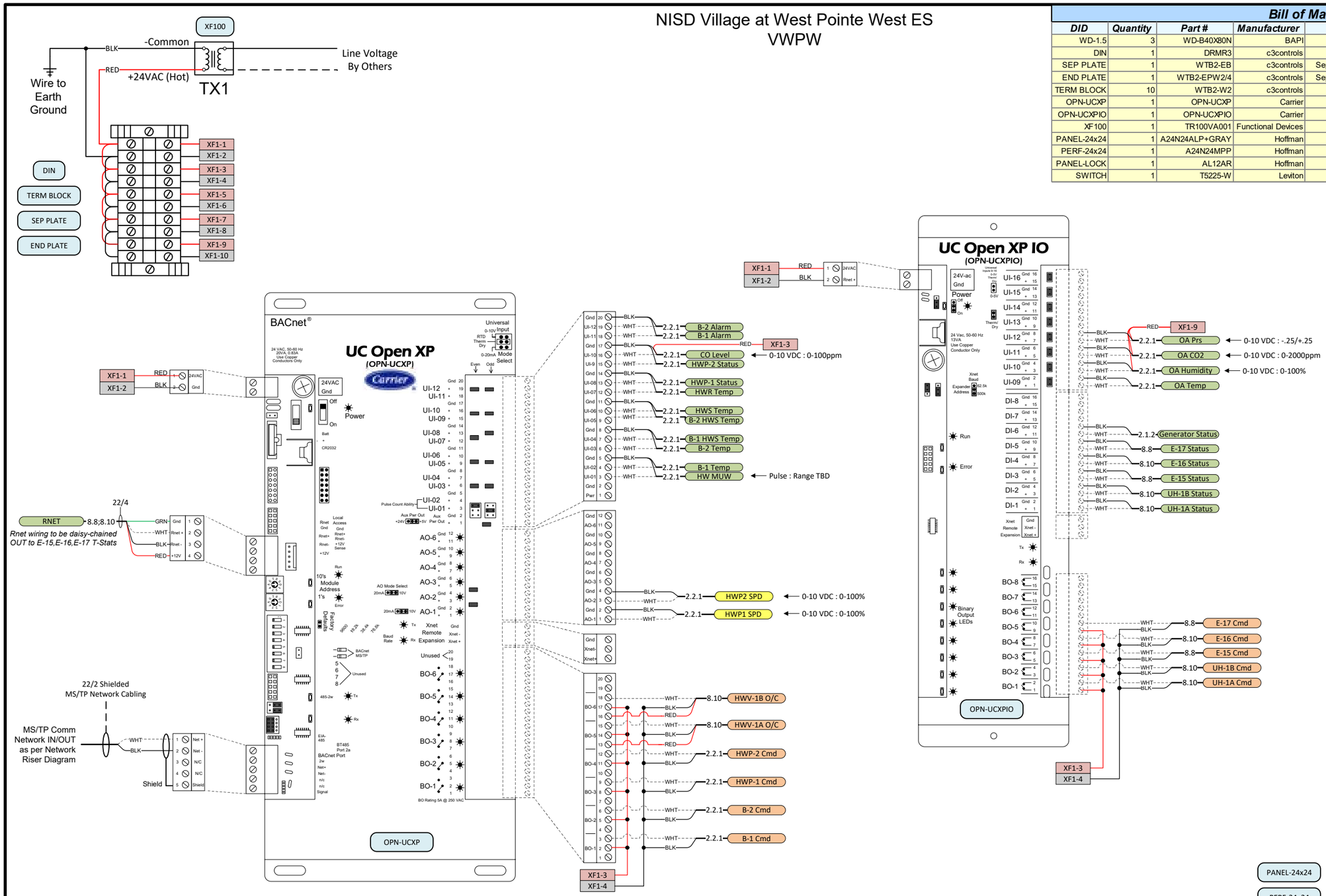


## Bill of Materials

| DID | Quantity | Part # | Manufacturer | Description |
|---|---|---|---|---|
| WD-1.5 | 3 | WD-B40X80N | BAPI | 1 1/2"W X 3"H Narrow Slot, Wiring Duct & Cover, 1pc, 6ft |
| DIN | 1 | DRMR3 | c3controls | DIN Rail, Slotted, 1 m Length, 35 mm Width x 7.5 mm, Plated Steel |
| SEP PLATE | 1 | WTB2-EB | c3controls | Separator Plates (50 pack), 8 mm, Fits 35 mm DIN Rail, Grey Non-metallic |
| END PLATE | 1 | WTB2-EPW2/4 | c3controls | Separator Plates (50 pack), 8 mm, Fits 35 mm DIN Rail, Grey Non-metallic |
| TERM BLOCK | 10 | WTB2-W2 | c3controls | Terminal Block, 5 mm width, DIN-mount |
| OPN-UCXP | 1 | OPN-UCXP | Carrier | UC Open XP (6 BO, 12 UI, 6 AO), Programmable, Multiple Equipment |
| OPN-UCXPIO | 1 | OPN-UCXPIO | Carrier | UC Open XP Expander (8 BO, 8 BI, 8AI), Need OPN-UCXP |
| XF100 | 1 | TR100VA001 | Functional Devices | Control Transformer (120 VAC Input - 24 VAC Output) |
| PANEL-24x24 | 1 | A24N24ALP+GRAY | Hoffman | Enclosure, Wall-mount, Hinged, Steel, NEMA1, 24"x24"x6" |
| PERF-24x24 | 1 | A24N24MPP | Hoffman | Enclosure, Perforated Back Plate, 24"x24" |
| PANEL-LOCK | 1 | AL12AR | Hoffman | Enclosure Key Lock Kit |
| SWITCH | 1 | T5225-W | Leviton | Single Pole Switch, Standard Receptacle; Self-grounding |

## Active Points List - OPN-UCXP

| Point Number | Point Type | Point Name | Setup |
|---|---|---|---|
| UI-01 | AI | HW Makeup Meter | Pulse |
| UI-02 | AI | B-1 Temp | Therm |
| UI-03 | AI | B-2 Temp | Therm |
| UI-04 | AI | B-1 HWS Temp | Therm |
| UI-05 | AI | B-2 HWS Temp | Therm |
| UI-06 | AI | HWS Temp | Therm |
| UI-07 | AI | HWR Temp | Therm |
| UI-08 | DI | HWP-1 Status | DC |
| UI-09 | DI | HWP-2 Status | DC |
| UI-10 | AI | CO Level | Volts |
| UI-11 | DI | B-1 Alarm | DC |
| UI-12 | DI | B-2 Alarm | DC |
| AO-1 | AO | HWP-1 Speed | Volts |
| AO-2 | AO | HWP-2 Speed | Volts |
| BO-1 | DO | B-1 Cmd | Relay |
| BO-2 | DO | B-2 Cmd | Relay |
| BO-3 | DO | HWP-1 Cmd | Relay |
| BO-4 | DO | HWP-2 Cmd | Relay |
| BO-5 | DO | HWV-1A O/C | Relay |
| BO-6 | DO | HWV-1B O/C | Relay |
| RNET | AI | Zone Temp E-15,16,17 | RNET |

## Active Points List - OPN-UCXPIO

| Point Number | Point Type | Point Name | Setup |
|---|---|---|---|
| DI-1 | DI | UH-1A Status | DC |
| DI-2 | DI | UH-1B Status | DC |
| DI-3 | DI | E-15 Status | DC |
| DI-4 | DI | E-16 Status | DC |
| DI-5 | DI | E-17 Status | DC |
| DI-6 | DI | Generator Status | DC |
| UI-09 | AI | OA Temp | Therm |
| UI-10 | AI | OA Humidity | Volts |
| UI-11 | AI | OA CO2 | Volts |
| UI-12 | AI | OA Pressure | Volts |
| BO-1 | DO | UH-1A Cmd | Relay |
| BO-2 | DO | UH-1B Cmd | Relay |
| BO-3 | DO | E-15 Cmd | Relay |
| BO-4 | DO | E-16 Cmd | Relay |
| BO-5 | DO | E-17 Cmd | Relay |

PANEL-24x24
PERF-24x24
PANEL-LOCK
SWITCH
WD-1.5

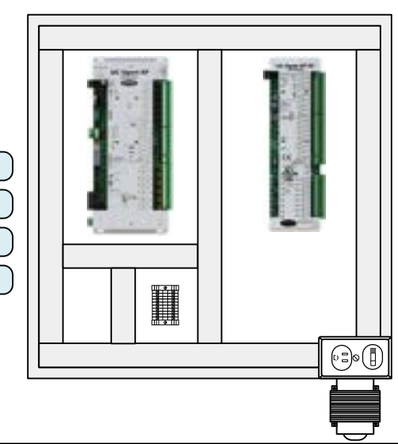

General Notes:
1. Refer to Network Diagram and Cable Specification Chart for wiring details and control module address.
2. Coordinate with Electrical Contractor (Div. 26) to provide 120 VAC circuit power to control panels.
3. Refer to Carrier Technical Documentation for specifications on control module setup, wiring, and driver configuration

Hot Water System Panel
Control Type 33

DWG # 2.2.2
JOB # VWPW

NISD Village at West Pointe West ES
San Antonio, TX

Drawn:
ENG: Dennis Schneiman

| REV # | DESCRIPTION | DATE |
|---|---|---|
| 0 | SUBMITTED | 4/28/2023 |


Yates Co
4738 Whirlwind Dr.
San Antonio, TX 78217
Phone: 2107023820

# NISD Village at West Pointe West ES
# VWPW

**SEQUENCE - CENTRAL PLANT HEATING:** DUAL CONDENSING BOILERS AND DUAL HEATING HOT WATER PUMPS

A. PROVIDE THIS CONTROL TYPE FOR HEATING BOILERS B-1 & B-2, AND HEATING HOT WATER PUMPS HP-1 & HP-2.

B. OPERATIONAL SEQUENCE:

B.1 AT START UP AS CONTROLLED BY DEMAND FROM ANY AIR HANDLING UNIT ENERGIZED BY THE EMS:

a. LEAD HOT WATER PUMP SHALL ENERGIZE AND ITS VSD SHALL MODULATE AS REQUIRED TO MAINTAIN *5 PSI DIFFERENTIAL PRESSURE ACROSS THE REMOTE AHU COIL WITH THE LOWEST DIFFERENTIAL PRESSURE. IF THE VFD EXCEEDS *90% FOR *15 MINUTES, LAG PUMP SHALL ENERGIZE. IF BOTH VFD'S OPERATE AT LESS THAN *40% FOR *15 MINUTES, LAG PUMP SHALL DE-ENERGIZE.
b. LEAD BOILER SHALL ENERGIZE AFTER VERIFIED FLOW AND SHALL OPERATE ON ITS OWN FACTORY CONTROLS.
c. BOILER SHALL MAINTAIN HOT WATER SUPPLY TEMPERATURE SETPOINT, IN ACCORD WITH THE RESET SCHEDULE BELOW.

d. IF LEAD BOILER DOES NOT MAINTAIN HOT WATER SUPPLY TEMPERATURE SETPOINT AFTER *15 MINUTES:
1. LAG BOILER SHALL ENERGIZE AFTER VERIFIED FLOW AND SHALL OPERATE ON ITS OWN FACTORY CONTROLS.
2. BOILERS SHALL MAINTAIN HOT WATER SUPPLY TEMPERATURE SETPOINT, IN ACCORD WITH THE FOLLOWING RESET SCHEDULE.

e. ON REDUCED LOAD, IF BOTH BOILERS ARE OPERATING AT *40% OR LESS, LAG BOILER SHALL DE-ENERGIZE IN THE REVERSE SEQUENCE.

f. ALL BOILERS AND PUMPS SHALL DE-ENERGIZE WHEN THERE IS NO CALL FOR HEAT FROM ANY AIR HANDLING UNIT.

g. PROVIDE A WEEKLY (*2:00 AM SUNDAY) LEAD/LAG ROTATION OF BOILERS AND HOT WATER PUMPS. BOILERS AND HOT WATER PUMPS WILL NOT BE DEDICATED.

h. IF A BOILER FAILURE IS DETECTED, THE FAILED BOILER SHALL DE-ENERGIZE. THE REMAINING SYSTEM SHALL OPERATE IN ACCORD WITH THE ABOVE SEQUENCE.

i. AT SHUTDOWN: BOILERS SHALL DE-ENERGIZE AND HW PUMPS SHALL DE-ENERGIZE.

j. IF ANY HOT WATER PUMP FAILS AS INDICATED BY ITS CT, IT SHALL DE-ENERGIZE AND ALARM EMS. THE OTHER PUMP SHALL ENERGIZE.

B.2 HOT WATER SUPPLY TEMPERATURE RESET SCHEDULE:

a.

| OA TEMP | HW SUPPLY TEMP |
|---|---|
| 20F | *160F |
| 70F | *105F |

b. PROVIDE MINIMUM *120F SUPPLY WATER UPON A DEHUMIDIFICATION REQUEST.

B.3 FREEZE PROTECTION: ANYTIME OUTSIDE AIR TEMPERATURE FALLS BELOW *36F DEGREES, ALL HOT WATER PUMPS SHALL BE ENERGIZED AND BOILERS ENABLE.

B.4 SYSTEM SHALL ALARM ON:
a. BOILER FAILURE.
b. HOT WATER PUMP FAILURE.
c. CARBON MONOXIDE DETECTION.
d. BOILER ACTIVATION REQUEST (EXCLUDING DEHUMIDIFICATION) WITH OUTSIDE AIR TEMPERATURE ABOVE *75F DEGREES.

C. DDC POINT SCHEDULE:

| | |
|---|---|
| BOILER TEMPERATURE | 1 EACH AI, EACH BOILER |
| BOILER SUPPLY WATER TEMPERATURE | 1 EACH AI, EACH BOILER |
| BUILDING SUPPLY WATER TEMPERATURE | 1 EACH AI |
| BUILDING RETURN WATER TEMPERATURE | 1 EACH AI |
| BOILER ALARM MONITOR | 1 EACH DI, EACH BOILER |
| BOILER START/STOP (ENABLE) | 1 EACH DO, EACH BOILER |
| BOILER STATUS | 1 EACH DI, EACH BOILER |
| HW PUMP SPEED CONTROL | 1 EACH AO, EACH PUMP |
| HW PUMP STATUS (CT) | 1 EACH DI, EACH PUMP |
| REMOTE COIL DOWNSTREAM PRESSURE | 1 EACH AI, EACH LOOP |
| REMOTE COIL UPSTREAM PRESSURE | 1 EACH AI, EACH LOOP |
| REMOTE COIL DIFFERENTIAL PRESSURE | 1 EACH AI, EACH LOOP |
| HW PUMP START/STOP | 1 EACH DO, EACH PUMP |
| CARBON MONOXIDE SENSOR | 1 EACH DI |
| AMBIENT TEMPERATURE | 1 EACH AI |

D. NOTES:
(1) EACH SPACE WITH A BOILER SHALL BE PROVIDED WITH A CARBON MONOXIDE (CO) SENSOR WITH MANUAL RESET, INTERLOCKED TO DISABLE EACH BOILERS' BURNER IF THE MEASURED LEVEL OF CO RISES ABOVE 50 PPM OR UPON LOSS OF POWER TO THE DETECTOR.

* ITEMS ARE TO BE FIELD ADJUSTABLE.

**SEQUENCE - WATER METERING:**

1. PROVIDE MONITORING AND TOTALIZING OF THE DOMESTIC WATER METER AT THE BUILDING SERVICE ENTRANCE. EMS SHALL ALARM IF THE FLOW EXCEEDS ALARM SETPOINT IN EXCESS OF *15 MINUTES.

2. PROVIDE MONITORING AND TOTALIZING OF THE IRRIGATION SUPPLY METER AT THE IRRIGATION SOURCE. EMS SHALL ALARM IF THE FLOW EXCEEDS ALARM SETPOINT IN EXCESS OF *15 MINUTES.
3. PROVIDE MONITORING AND TOTALIZING OF THE INTERIOR WATER METERS LISTED BELOW. EMS SHALL ALARM IF THE FLOW EXCEEDS THE ALARM SETPOINT IN EXCESS OF *15 MINUTES (INDIVIDULLY ADJUSTABLE FOR EACH METER).

| | | |
|---|---|---|
| A. | BUILDING DOMESTIC WATER: | FLOW ALARM SETPOINT: *150 GPM. |
| B. | CHILLED WATER MAKE-UP: | FLOW ALARM SETPOINT: *50 GPM. |
| C. | HEATING WATER MAKE-UP: | FLOW ALARM SETPOINT: *50 GPM. |
| D. | IRRIGATION WATER METERS, EACH: | FLOW ALARM SETPOINT: *75 GPM. |

4. DDC POINT SCHEDULE: METER FLOW 1 EACH AI PER METER

## Outside Air Conditions

The controller will monitor the outside air temperature and humidity. The controller will calculate the outside air enthalpy on a continual basis. These values will be made available to the system at all times.

Alarm will be generated as follows:
Sensor Failure: Sensor reading indicates shorted or disconnected sensor.

If an OA Temp Sensor cannot be read, a default value of 60°F will be used.

If an OA Humidity Sensor cannot be read, a default value of 50% will be used.

Outside Air Temperature History:
The controller will monitor and record the high and low temperature readings for the outside air. These readings will be recorded on a daily, month-to-date, and year-to-date basis.

Cooling Degree Day:
The controller will provide a Degree Day history index that reflects the energy consumption for the facilities cooling demand. Computations will use a mean daily temperature of 65°F (adj.). The Degree Day peak value readings will be recorded on a daily, month-to-date, and year-to-date basis.

Heating Degree Day:
The controller will provide a Degree Day history index that reflects the energy consumption for the facilities heating demand. Computations will use a mean daily temperature of 65°F (adj.). The Degree Day peak value readings will be recorded on a daily, month-to-date, and year-to-date basis.

Hot Water System Sequence
Control Type 33

DWG # 2.2.3

JOB # VWPW

NISD Village at West Pointe West ES

San Antonio, TX

| REV # | DESCRIPTION | DATE |
|---|---|---|
| 1 | Revision 1 | 8/14/2023 |
| 0 | SUBMITTED | 4/28/2023 |

Drawn:
ENG: Dennis Schnellman

Yates Co
4738 Whirlwind Dr.
San Antonio, TX 78217
Phone: 2107023820

NISD Village at West Pointe West ES
VWPW

## Bill of Materials

| DID | Quantity | Part # | Manufacturer | Description |
|---|---|---|---|---|
| T-I-4 | 2 | BA/10K-2-I-4"-BB2 | BAPI | Immersion, 10K-2 Thermistor, 4" (no well) |
| T-S-1 | 8 | BA/10K-2-S-BBX | BAPI | Strap-on, 10K-2 Thermistor, 2-4.5" pipe |
| TW-4 | 2 | BA/4"M316 | BAPI | Immersion Temp Sensor Thermowell, 4", 316 SS |
| RIB | 6 | RIBU1C | Functional Devices | Enclosed Relay 10 Amp SPDT, 10-30VDC/VDC or 120 VAC Coil |

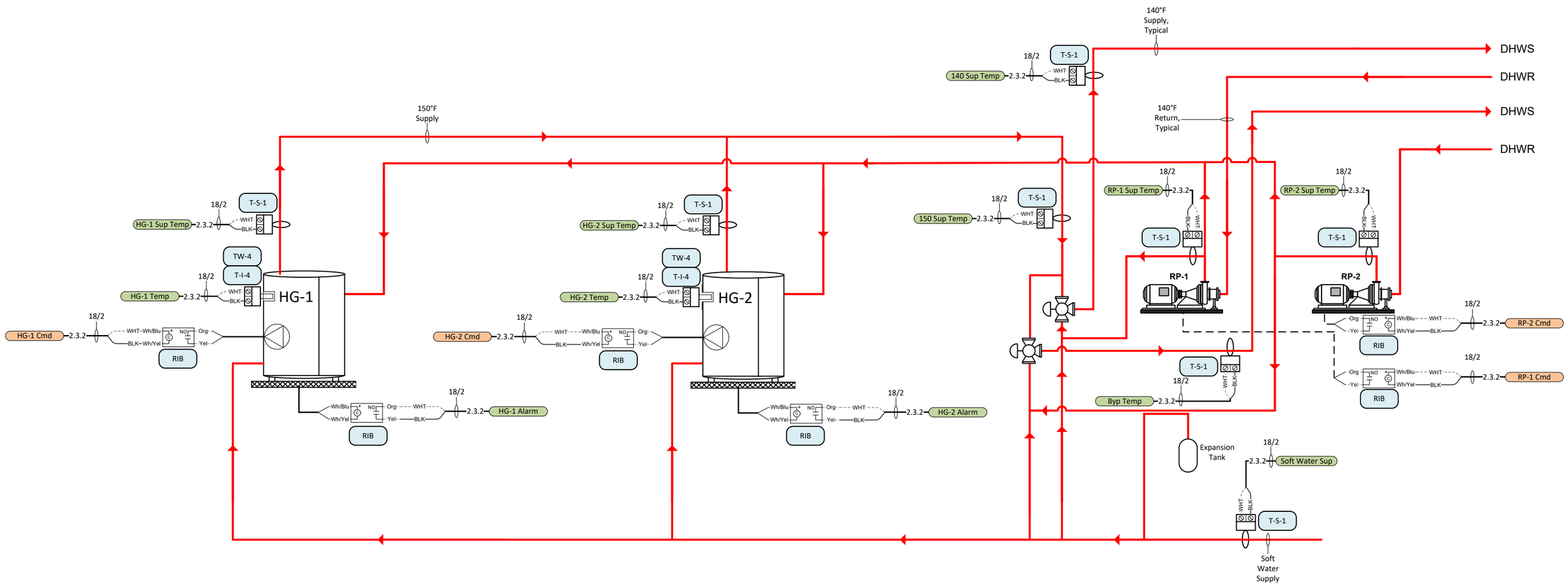


General Notes:
1. Refer to Network Diagram and Cable Specification Chart for wiring details and control module address.
2. Coordinate with Electrical Contractor (Div. 26) to provide 120 VAC circuit power to control panels.
3. Refer to Carrier Technical Documentation for specifications on control module setup, wiring, and driver configuration

Domestic HW Generator
Control Type 34

DWG # 2.3.1
JOB # VWPW

NISD Village at West Pointe West ES
San Antonio, TX

Drawn: ENG: Dennis Schnellman

| REV # | DESCRIPTION | DATE |
|---|---|---|
| 0 | SUBMITTED | 4/28/2023 |


Yates Co
4738 Whirlwind Dr.
San Antonio, TX 78217
Phone: 2107023820

# NISD Village at West Pointe West ES
# VWPW

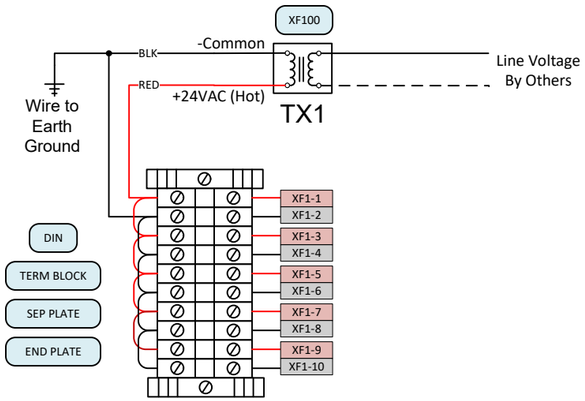


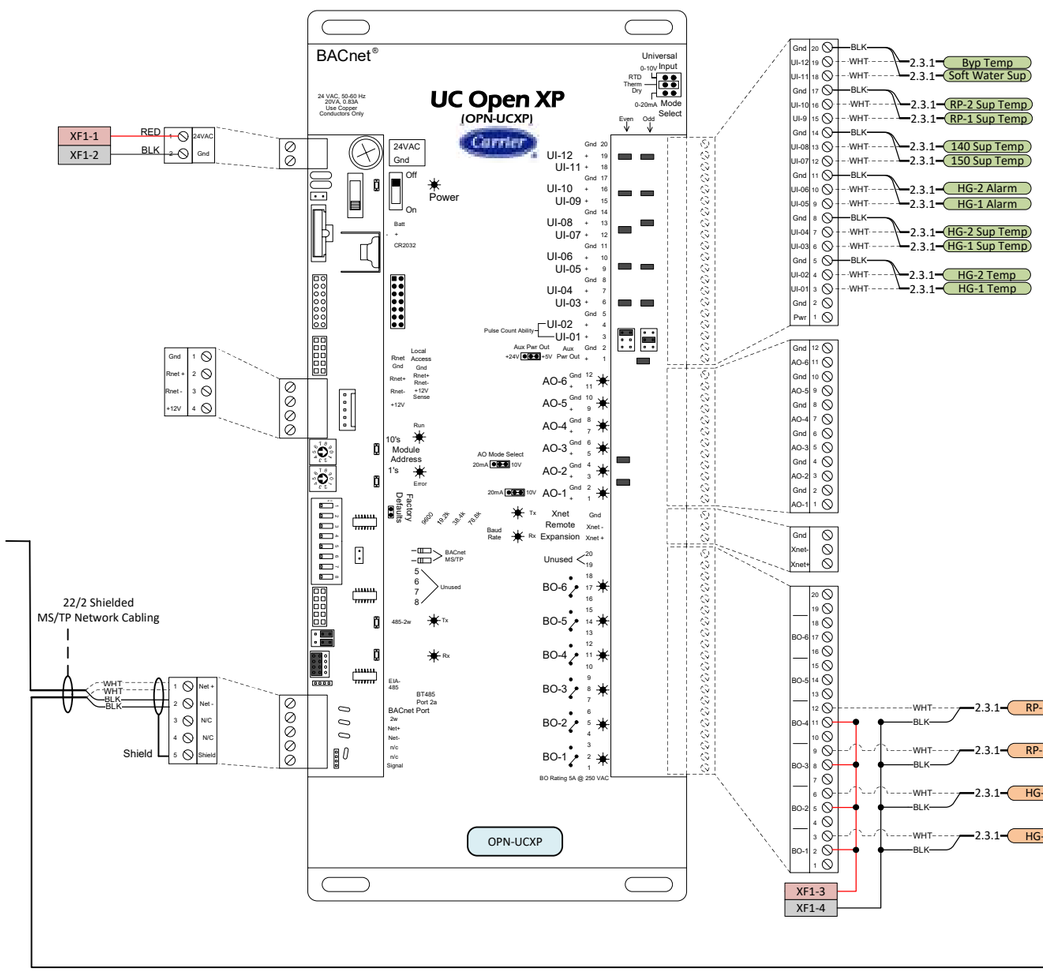


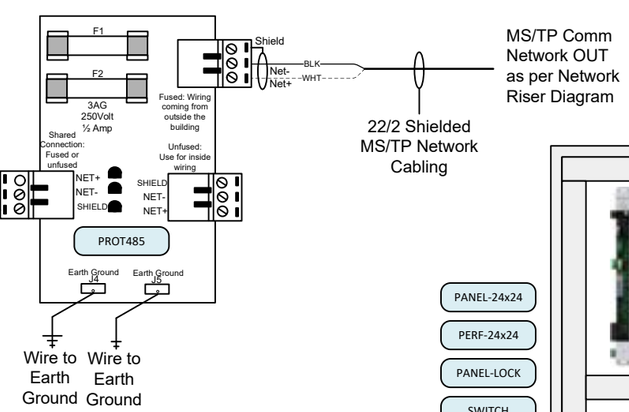


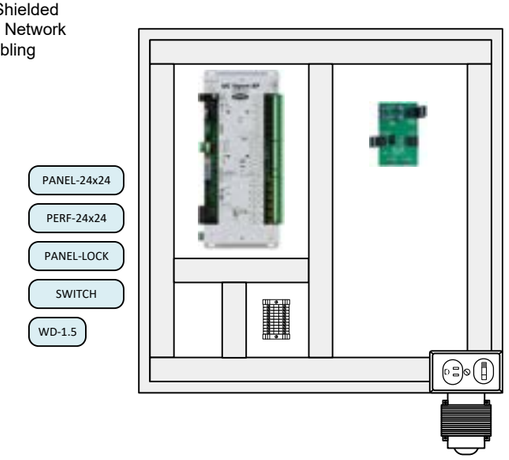


## Bill of Materials

| DID | Quantity | Part # | Manufacturer | Description |
|---|---|---|---|---|
| WD-1.5 | 3 | WD-B40X80N | BAPI | 1 1/2"W X 3"H Narrow Slot, Wiring Duct & Cover, 1pc, 6ft |
| DIN | 1 | DRMR3 | c3controls | DIN Rail, Slotted, 1 m Length, 35 mm Width x 7.5 mm, Plated Steel |
| SEP PLATE | 1 | WTB2-EB | c3controls | Separator Plates (50 pack), 8 mm, Fits 35 mm DIN Rail, Grey Non-metallic |
| END PLATE | 1 | WTB2-EPW2/4 | c3controls | Separator Plates (50 pack), 8 mm, Fits 35 mm DIN Rail, Grey Non-metallic |
| TERM BLOCK | 10 | WTB2-W2 | c3controls | Terminal Block, 5 mm width, DIN-mount |
| OPN-UCXP | 1 | OPN-UCXP | Carrier | UC Open XP (6 BO, 12 UI, 6 AO), Programmable, Multiple Equipment |
| PROT485 | 1 | PROT485 | Carrier | Network Protection Board |
| XF100 | 1 | TR100VA001 | Functional Devices | Control Transformer (120 VAC Input - 24 VAC Output) |
| PANEL-24x24 | 1 | A24N24ALP+GRAY | Hoffman | Enclosure, Wall-mount, Hinged, Steel, NEMA1, 24"x24"x6" |
| PERF-24x24 | 1 | A24N24MPP | Hoffman | Enclosure, Perforated Back Plate, 24"x24" |
| PANEL-LOCK | 1 | AL12AR | Hoffman | Enclosure Key Lock Kit |
| SWITCH | 1 | T5225-W | Leviton | Single Pole Switch, Standard Receptacle; Self-grounding |

## Active Points List

| Point Number | Point Type | Point Name | Setup |
|---|---|---|---|
| UI-01 | AI | HG-1 Temp | Therm |
| UI-02 | AI | HG-2 Temp | Therm |
| UI-03 | AI | HG-1 Supply Temp | Therm |
| UI-04 | AI | HG-2 Supply Temp | Therm |
| UI-05 | DI | HG-1 Alarm | DC |
| UI-06 | DI | HG-2 Alarm | DC |
| UI-07 | AI | 150 Supply Temp | Therm |
| UI-08 | AI | 140 Supply Temp | Therm |
| UI-09 | AI | RP-1 Supply Temp | Therm |
| UI-10 | AI | RP-2 Supply Temp | Therm |
| UI-11 | AI | Soft Water Temp | Therm |
| UI-12 | AI | Byp Temp | Therm |
| BO-1 | DO | HG-1 Cmd | Relay |
| BO-2 | DO | HG-2 Cmd | Relay |
| BO-3 | DO | RP-1 Cmd | Relay |
| BO-4 | DO | RP-2 Cmd | Relay |

General Notes:
1. Refer to Network Diagram and Cable Specification Chart for wiring details and control module address.
2. Coordinate with Electrical Contractor (Div. 26) to provide 120 VAC circuit power to control panels.
3. Refer to Carrier Technical Documentation for specifications on control module setup, wiring, and driver configuration

Domestic HW Generator Panel
Control Type 34
DWG # 2.3.2
JOB # VWPW

NISD Village at West Pointe West ES
San Antonio, TX

Drawn:
ENG: Dennis Schnelman

| REV # | DESCRIPTION | DATE |
|---|---|---|
| 0 | SUBMITTED | 4/28/2023 |


Yates Co
4738 Whirlwind Dr.
San Antonio, TX 78217
Phone: 2107023820

**SEQUENCE - DOMESTIC HOT WATER GENERATORS:**

A. PROVIDE THIS CONTROL TYPE FOR THE CENTRAL PLANT DOMESTIC HOT WATER GENERATORS/HEATERS, AND ASSOCIATED DOMESTIC HOT WATER CIRCULATING PUMPS.

B. OPERATIONAL SEQUENCE:

B.1 AT START UP AS SCHEDULED, OR BY THE AREAS BEING ENERGIZED:

a. HOT WATER GENERATORS SHALL ENERGIZE.

b. HOT WATER GENERATORS SHALL MAINTAIN *150F DEGREE TEMPERATURE THEIR FACTORY CONTROLS.

c. ALL HOT WATER CIRCULATING PUMPS SHALL ENERGIZE.

d. SYSTEM SHALL ALARM IF:
1. ANY HOT WATER GENERATOR FAILS.
2. ANY HOT WATER GENERATOR TEMPERATURE IS BELOW *120F DEGREES AFTER *60 MINUTES OPERATION.
3. ANY HOT WATER GENERATOR TEMPERATURE IS ABOVE *170F DEGREES.
4. *150F DEGREE COMBINED LOOP TEMPERATURE IS ABOVE *160F DEGREES.
5. TEMPERATURE OF SOFT WATER MAIN AT SOFTENER OUTLET REMAINS ABOVE *110F DEGREES FOR *30 MINUTES.

e. IF A *140F DEGREE LOOP TEMPERATURE IS ABOVE *155F DEGREES, DE-ENERGIZE THE ASSOCIATED RECIRCULATING PUMP.

f. AT SHUTDOWN:
1. HOT WATER GENERATORS SHALL DE-ENERGIZE.
2. HOT WATER CIRCULATING PUMPS SHALL DE-ENERGIZE.

C. DDC POINT SCHEDULE:

| | | | |
|---|---|---|---|
| DHW GEN START/STOP | 1 EACH DO | 140F DEG LOOP SUPPLY TEMP | 1 EACH AI PER LOOP |
| DHW GEN TEMPERATURE | 1 EACH AI | 140F DEG LOOP RETURN TEMP | 1 EACH AI PER LOOP |
| DHW GEN ALARM MONITOR | 1 EACH DI | SOFT WATER TEMP | 1 EACH AI |
| 150F DEG COMBINED LOOP TEMP | 1 EACH AI | CIRCULATING PUMP START/STOP | 1 EACH DO PER PUMP |
| DHW GEN SUPPLY TEMP | 1 EACH AI | CARBON MONOXIDE | 1 EACH AI |

D. NOTES:
(1) EACH SPACE WITH GAS-FIRED EQUIPMENT SHALL BE PROVIDED WITH A CARBON MONOXIDE (CO) SENSOR WITH MANUAL RESET, INTERLOCKED TO DISABLE EACH EQUIPMENT IF THE MEASURED LEVEL OF CO RISES ABOVE 50 PPM OR UPON LOSS OF POWER TO THE DETECTOR.

* ITEMS ARE TO BE FIELD ADJUSTABLE.

DHW Generator Sequence
Control Type 34
DWG # 2.3.3
JOB # VWPW

NISD Village at West Pointe West ES
San Antonio, TX

| REV # | DESCRIPTION | DATE |
|---|---|---|
| 1 | Revision 1 | 8/14/2023 |
| 0 | SUBMITTED | 4/28/2023 |

Drawn:
ENG: Dennis Schnellman

Yates Co
4738 Whirlwind Dr.
San Antonio, TX 78217
Phone: 2107023820

NISD Village at West Pointe West ES
VWPW

## Bill of Materials

| DID | Quantity | Part # | Manufacturer | Description |
|---|---|---|---|---|
| T-I-4 | 1 | BA/10K-2-I-4"-BB2 | BAPI | Immersion, 10K-2 Thermistor, 4" (no well) |
| T-S-1 | 4 | BA/10K-2-S-BBX | BAPI | Strap-on, 10K-2 Thermistor, 2-4.5" pipe |
| TW-4 | 1 | BA/4"M316 | BAPI | Immersion Temp Sensor Thermowell, 4", 316 SS |
| RIB | 1 | RIBU1C | Functional Devices | Enclosed Relay 10 Amp SPDT, 10-30VDC/VDC or 120 VAC Coil |

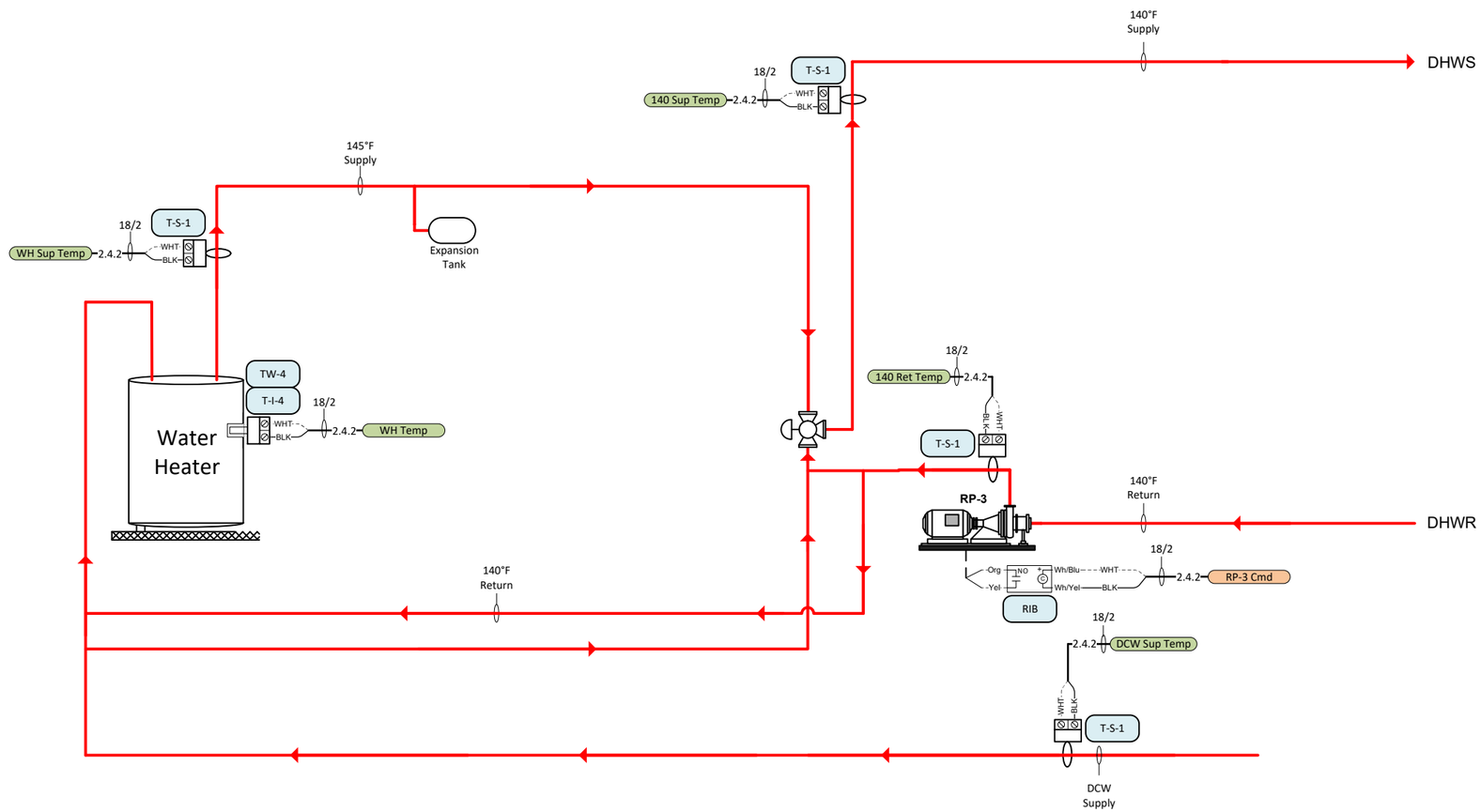


General Notes:
1. Refer to Network Diagram and Cable Specification Chart for wiring details and control module address.
2. Coordinate with Electrical Contractor (Div. 26) to provide 120 VAC circuit power to control panels.
3. Refer to Carrier Technical Documentation for specifications on control module setup, wiring, and driver configuration

Local Water Heater
Control Type 29

DWG # 2.4.1
JOB # VWPW

NISD Village at West Pointe West ES
San Antonio, TX

Drawn:
ENG: Dennis Schnellman

| REV # | DESCRIPTION | DATE |
|---|---|---|
| 0 | SUBMITTED | 4/28/2023 |


Yates Co
4738 Whirlwind Dr.
San Antonio, TX 78217
Phone: 2107023820

NISD Village at West Pointe West ES
VWPW

## Bill of Materials

| DID | Quantity | Part # | Manufacturer | Description |
|---|---|---|---|---|
| OPN-UC | 1 | OPN-UC | Carrier | Prog. Controller (5 BO, 6 UI), 5 Equipment |

### Active Points List

| Point Number | Point Type | Point Name | Setup |
|---|---|---|---|
| IN-1 | AI | WH Temp | Therm |
| IN-2 | AI | WH Sup Temp | Therm |
| IN-3 | AI | 140 Sup Temp | Therm |
| IN-4 | AI | 140 Ret Temp | Therm |
| IN-5 | AI | DCW Sup Temp | Therm |
| BO-1 | DO | RP-3 Cmd | Relay |

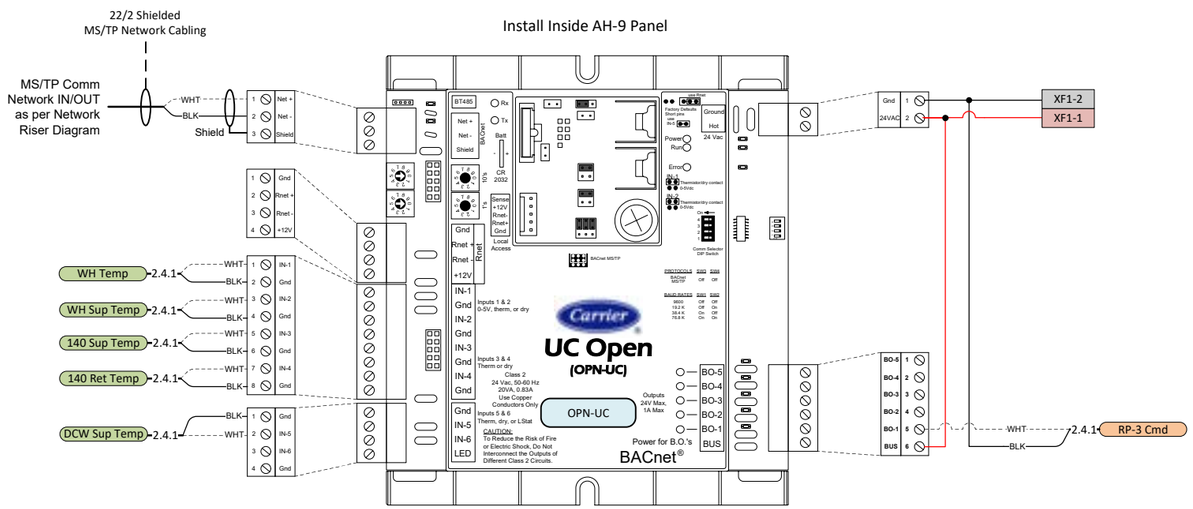


**SEQUENCE - WATER HEATER:**

A. PROVIDE THIS CONTROL TYPE FOR DOMESTIC WATER HEATER WH-XX WITH RP-XX.

B. OPERATIONAL SEQUENCE:

B.1 ANYTIME: WATER HEATER SHALL MAINTAIN 145F DEGREE TEMPERATURE ON ITS CONTROLS.

B.2 AT START UP AS SCHEDULED, OR BY THE AREAS BEING ENERGIZED, AS APPLICABLE:

a. HOT WATER CIRCULATING PUMP SHALL ENERGIZE.

b. IF *140F DEGREES LOOP TEMPERATURE IS ABOVE *155F DEGREES, DE-ENERGIZE THE CIRCULATING PUMP.

c. SYSTEM SHALL ALARM IF:
1. WATER HEATER TEMPERATURE IS BELOW *120F DEGREES AFTER *30 MINUTES OPERATION.
2. WATER HEATER TEMPERATURE IS ABOVE *180F DEGREES.
3. *140F DEGREE LOOP TEMPERATURE IS ABOVE *155F DEGREES.

d. AT SHUTDOWN: HOT WATER CIRCULATING PUMP SHALL DE-ENERGIZE.

C. DDC POINT SCHEDULE:

| | | | |
|---|---|---|---|
| DCW TEMP | 1 EACH AI | 140F DEG LOOP SUPPLY TEMP | 1 EACH AI |
| WATER HEATER TEMP | 1 EACH AI | 140F DEG LOOP RETURN TEMP | 1 EACH AI |
| SOFT WATER TEMP | 1 EACH AI | CIRCULATING PUMP START/STOP | 1 EACH DO |
| 145F DEG LOOP TEMP | 1 EACH AI | | |

* ITEMS ARE TO BE FIELD ADJUSTABLE.

General Notes:
1. Refer to Network Diagram and Cable Specification Chart for wiring details and control module address.
2. Coordinate with Electrical Contractor (Div. 26) to provide 120 VAC circuit power to control panels.
3. Refer to Carrier Technical Documentation for specifications on control module setup, wiring, and driver configuration

Local Water Heater Panel
Control Type 29
DWG # 2.4.2
JOB # VWPW

NISD Village at West Pointe West ES
San Antonio, TX

Drawn:
ENG: Dennis Schnellman

| REV # | DESCRIPTION | DATE |
|---|---|---|
| 1 | Revision 1 | 8/14/2023 |
| 0 | SUBMITTED | 4/28/2023 |


Yates Co
4738 Whirlwind Dr.
San Antonio, TX 78217
Phone: 2107023820

NISD Village at West Pointe West ES
VWPW

## Air Handling Unit Schedule

| Type | Unit Tag | Area Served | CO2 Setpoint for Min OA | CO2 Setpoint for Max OA | Min OA (cfm) | Max OA (cfm) | Relief Vent Interlock |
|---|---|---|---|---|---|---|---|
| 5 | AH-1 | Kitchen | N/A | N/A | 900 | 1600 | RV-1 |
| 1 | AH-2 | Platform | 1000 | 1200 | 170 | 630 | RV-2 |
| 4 | AH-3 | Music/Corr's | 700 | 900 | 600 | 600 | RV-3 |
| 1 | AH-4 | Cafeteria | 1000 | 1300 | 920 | 3375 | RV-4 |
| 1 | AH-5 | Gym | 1900 | 2100 | 1975 | 1975 | RV-5 |
| 3 | AH-6 | Library | 500 | 700 | 485 | 980 | RV-6 |
| 2 | AH-7 | Admin-Offices | 600 | 800 | 700 | 700 | RV-7 |
| 4 | AH-8 | Admin-Counselors | 600 | 800 | 575 | 575 | RV-8 |
| 4 | AH-9 | A1 & E1 C/R's | 700 | 900 | 1750 | 3950 | RV-9 |
| 4 | AH-10 | C1 Classrooms | 700 | 900 | 2600 | 3625 | RV-10A,10B |
| 4 | AH-11 | D1 & E1 C/R's | 700 | 900 | 2050 | 4060 | RV-11 |
| 4 | AH-12 | C2 Classrooms | 700 | 900 | 1750 | 3810 | RV-12A,12B |
| 4 | AH-13 | D2 Classrooms | 700 | 900 | 1475 | 2635 | RV-13 |
| 4 | AH-14 | E2 Classrooms | 700 | 900 | 1025 | 2635 | RV-14 |
| 8 | RT-1 | Custodian Office B107 | N/A | N/A | 50 | 50 | N/A |
| 7 | RT-2 | IDF B105A | N/A | N/A | 0 | 0 | N/A |
| 7 | RT-3 | MDF B101 | N/A | N/A | 0 | 0 | N/A |
| 7 | RT-4 | IDF C102 & C202 | N/A | N/A | 0 | 0 | N/A |
| 3 | DH-1 | Library | N/A | N/A | 0 | 0 | N/A |

AHU Schedule
DWG # 3.0.1
JOB # VWPW
NISD Village at West Pointe West ES
San Antonio, TX

| REV # | DESCRIPTION | DATE |
|---|---|---|
| 0 | SUBMITTED | 4/28/2023 |

Drawn:
ENG: Dennis Schnellman

Yates Co
4738 Whirlwind Dr.
San Antonio, TX 78217
Phone: 2107023820

# NISD Village at West Pointe West ES
# VWPW

## Typical of AHU-3,8,9,11,13,14

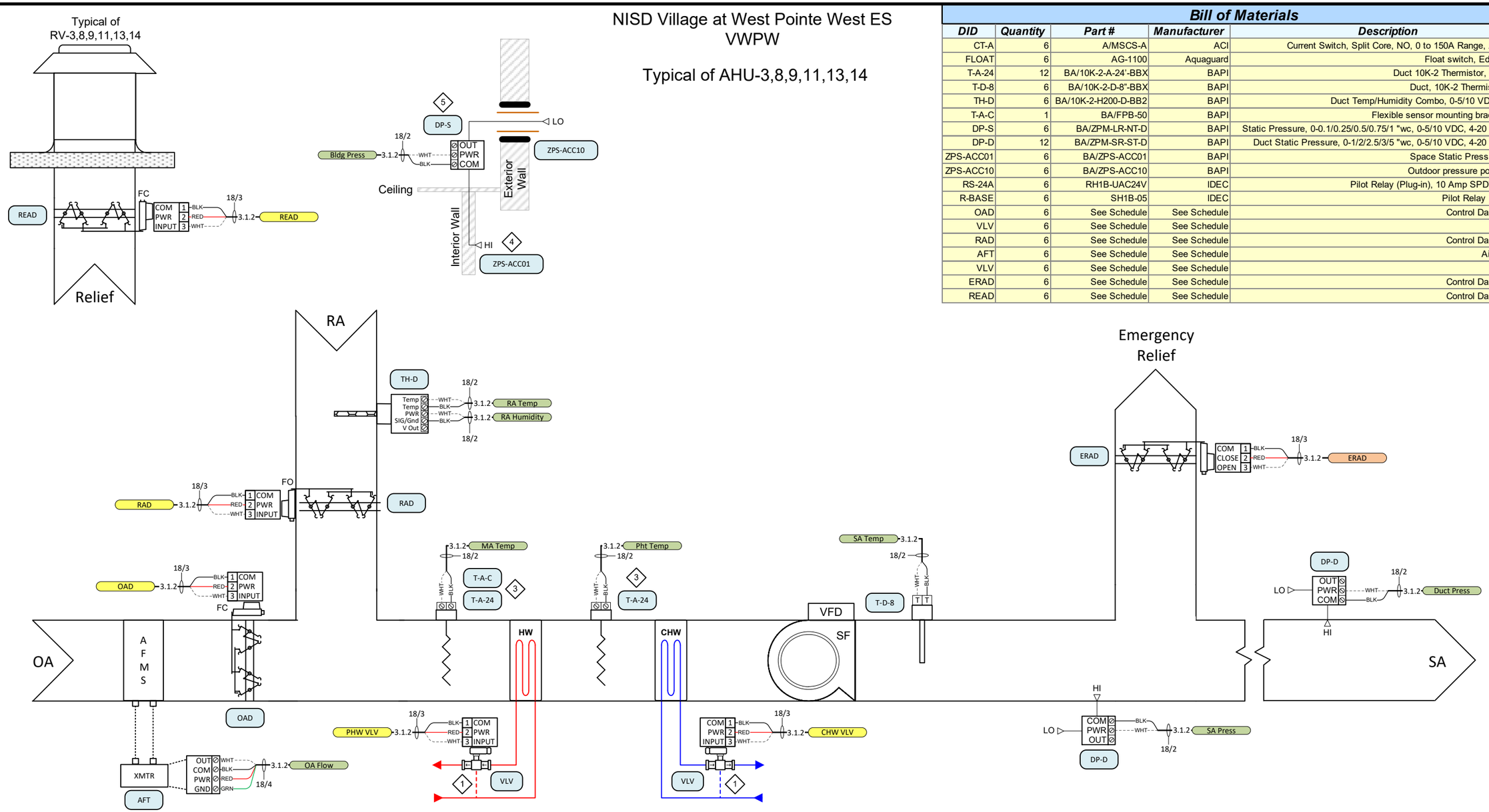


## Bill of Materials

| DID | Quantity | Part # | Manufacturer | Description |
|---|---|---|---|---|
| CT-A | 6 | A/MSCS-A | ACI | Current Switch, Split Core, NO, 0 to 150A Range, Adj. Trip Point |
| FLOAT | 6 | AG-1100 | Aquaguard | Float switch, Edge mount, NC |
| T-A-24 | 12 | BA/10K-2-A-24'-BBX | BAPI | Duct 10K-2 Thermistor, Averaging, 24' |
| T-D-8 | 6 | BA/10K-2-D-8"-BBX | BAPI | Duct, 10K-2 Thermistor, Probe, 8" |
| TH-D | 6 | BA/10K-2-H200-D-BB2 | BAPI | Duct Temp/Humidity Combo, 0-5/10 VD/4-20 mA, 2% |
| T-A-C | 1 | BA/FPB-50 | BAPI | Flexible sensor mounting bracket (50 pack) |
| DP-S | 6 | BA/ZPM-LR-NT-D | BAPI | Static Pressure, 0-0.1/0.25/0.5/0.75/1 "wc, 0-5/10 VDC, 4-20 mA, +/-0.25% |
| DP-D | 12 | BA/ZPM-SR-ST-D | BAPI | Duct Static Pressure, 0-1/2/2.5/3/5 "wc, 0-5/10 VDC, 4-20 mA, +/-0.25% |
| ZPS-ACC01 | 6 | BA/ZPS-ACC01 | BAPI | Space Static Pressure Wall Plate |
| ZPS-ACC10 | 6 | BA/ZPS-ACC10 | BAPI | Outdoor pressure port, side mount |
| RS-24A | 6 | RH1B-UAC24V | IDEC | Pilot Relay (Plug-in), 10 Amp SPDT, 24VAC Coil |
| R-BASE | 6 | SH1B-05 | IDEC | Pilot Relay (Plug-in) Base |
| OAD | 6 | See Schedule | See Schedule | Control Damper Actuator |
| VLV | 6 | See Schedule | See Schedule | Control Valve |
| RAD | 6 | See Schedule | See Schedule | Control Damper Actuator |
| AFT | 6 | See Schedule | See Schedule | Air Flow Station |
| VLV | 6 | See Schedule | See Schedule | Control Valve |
| ERAD | 6 | See Schedule | See Schedule | Control Damper Actuator |
| READ | 6 | See Schedule | See Schedule | Control Damper Actuator |

| Key Drawing Notes: | |
|---|---|
| 1 | 3-way valves on AHU-3 & 13 ONLY – See valve schedule |
| 2 | Install relay inside control panel – see panel layout next page. Install appropriate wire from relay to field termination. |
| 3 | Install averaging sensor with sensor brackets to avoid kinks in flexible probe |
| 4 | See mechanical drawing floorplans for locations of interior building pressure sensor tap, Mount 96" AFF |
| 5 | Locate transmitter near AHU panel |

General Notes:
1. Refer to Network Diagram and Cable Specification Chart for wiring details and control module address.
2. Coordinate with Electrical Contractor (Div. 26) to provide 120 VAC circuit power to control panels.
3. Refer to Carrier Technical Documentation for specifications on control module setup, wiring, and driver configuration

VAV AHU (T4)
Control Type 4
DWG # 3.1.1
JOB # VWPW

NISD Village at West Pointe West ES
San Antonio, TX

Drawn:
ENG: Dennis Schnellman

| REV # | DESCRIPTION | DATE |
|---|---|---|
| 0 | SUBMITTED | 4/28/2023 |


Yates Co
4738 Whirlwind Dr.
San Antonio, TX 78217
Phone: 2107023820

# NISD Village at West Pointe West ES
# VWPW

## Typical of AHU-3,8,9,11,13,14

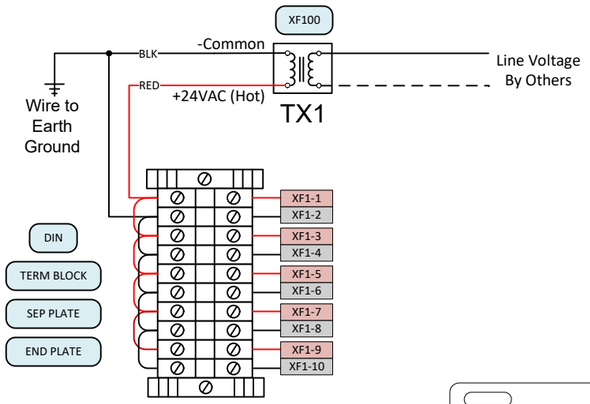


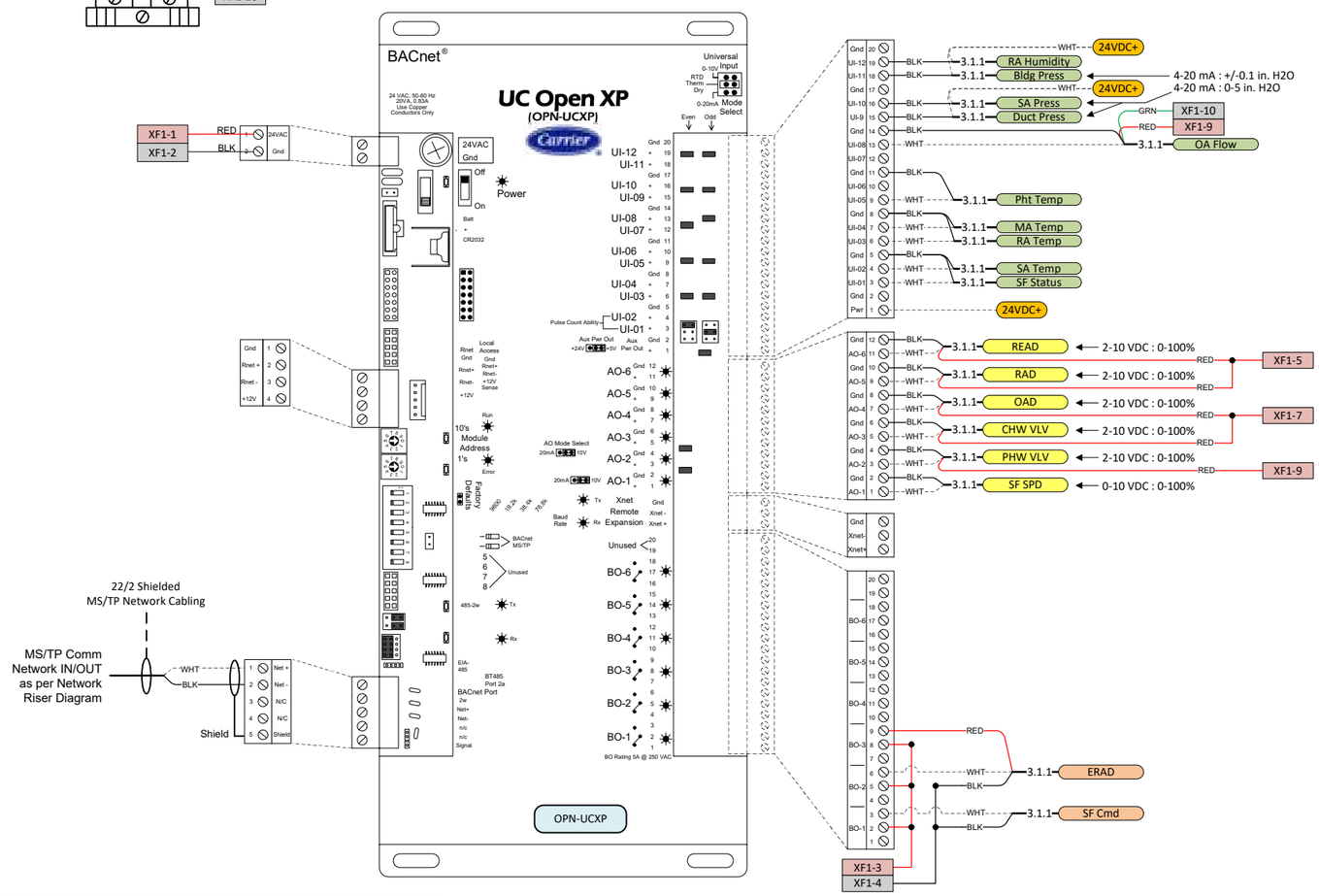


| Key Drawing Notes: | |
|---|---|
| 1 | Related Exhaust Fan Controller mounted in AH-3,8,9 and 11 control panels. See exhaust fan schedule for details. |
| 2 | Remote CHW and HW pressure monitoring controllers. To be mounted in AH-13 control panel only. See dwg. 3.5 DWH Controller to be mounted in AH-9 control panel. See dwg. 2.4.2 |
| 3 | NEMA 3R panels for AH-3,8,13. Mount transformer inside panel for NEMA 3R applications. |

General Notes:
1. Refer to Network Diagram and Cable Specification Chart for wiring details and control module address.
2. Coordinate with Electrical Contractor (Div. 26) to provide 120 VAC circuit power to control panels.
3. Refer to Carrier Technical Documentation for specifications on control module setup, wiring, and driver configuration

## Bill of Materials

| DID | Quantity | Part # | Manufacturer | Description |
|---|---|---|---|---|
| DIN | 6 | DRMR3 | c3controls | DIN Rail, Slotted, 1 m Length, 35 mm Width x 7.5 mm, Plated Steel |
| WD-1.5 | 6 | WD-B40X80N | c3controls | 1 1/2"W X 3"H Narrow Slot, Wiring Duct & Cover, 1pc, 6ft |
| SEP PLATE | 1 | WTB2-EB | c3controls | Separator Plates (50 pack), 8 mm, Fits 35 mm DIN Rail, Grey Non-metallic |
| END PLATE | 1 | WTB2-EPW2/4 | c3controls | Separator Plates (50 pack), 8 mm, Fits 35 mm DIN Rail, Grey Non-metallic |
| TERM BLOCK | 60 | WTB2-W2 | c3controls | Terminal Block, 5 mm width, DIN-mount |
| OPN-UCXP | 6 | OPN-UCXP | Carrier | UC Open XP (6 BO, 12 UI, 6 AO), Programmable, Multiple Equipment |
| XF100 | 6 | TR100VA001 | Functional Devices | Control Transformer (120 VAC Input - 24 VAC Output) |
| PANEL-24x24 | 3 | A24N24ALP+GRAY | Hoffman | Enclosure, Wall-mount, Hinged, Steel, NEMA1, 24"x24"x6" |
| PERF-24x24 | 3 | A24N24MPP | Hoffman | Enclosure, Perforated Back Plate, 24"x24" |
| PERF-24x24 | 3 | A24P24 | Hoffman | Enclosure, Back Plate, 24"x24" |
| PANEL-24x24 | 3 | A24R248HCLO | Hoffman | Enclosure, Wall-mount, Hinged, NEMA3R, 24"x24"x8" |
| PANEL-LOCK | 6 | AL12AR | Hoffman | Enclosure Key Lock Kit |
| SWITCH | 6 | T5225-W | Leviton | Single Pole Switch, Standard Receptacle; Self-grounding |

## Active Points List

| Point Number | Point Type | Point Name | Setup |
|---|---|---|---|
| UI-01 | DI | SF Status | DC |
| UI-02 | AI | Supply Air Temp | Therm |
| UI-03 | AI | Return Air Temp | Therm |
| UI-04 | AI | Mixed Air Temp | Therm |
| UI-05 | AI | Preheat DA Temp | Therm |
| UI-08 | AI | OA Flow | mA |
| UI-09 | AI | Duct Pressure | mA |
| UI-10 | AI | Supply Pressure | mA |
| UI-11 | AI | Bldg Pressure | mA |
| UI-12 | AI | Return Air Humidity | mA |
| AO-1 | AO | Supply Fan Speed | Volts |
| AO-2 | AO | Preheat HW Valve | Volts |
| AO-3 | AO | CHW Valve | Volts |
| AO-4 | AO | Outside Air Damper | Volts |
| AO-5 | AO | Return Air Damper | Volts |
| AO-6 | AO | Relief Air Damper | Volts |
| BO-1 | DO | Supply Fan Cmd | Relay |
| BO-2 | DO | Emerg Relief Open | Relay |
| BO-3 | DO | Emerg Relief Close | Relay |

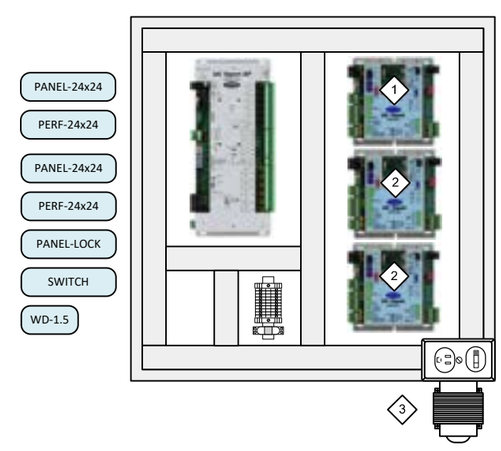


VAV AHU (T4) Panel
Control Type 4

DWG # 3.1.2

JOB # VWPW

NISD Village at West Pointe West ES

San Antonio, TX

| REV # | DESCRIPTION | DATE |
|---|---|---|
| 1 | Revision 1 | 8/14/2023 |
| 0 | SUBMITTED | 4/28/2023 |

Drawn:
ENG: Dennis Schnellman


Yates Co
4738 Whirlwind Dr.
San Antonio, TX 78217
Phone: 2107023820

# NISD Village at West Pointe West ES
# VWPW

## Typical of AHU-10,12

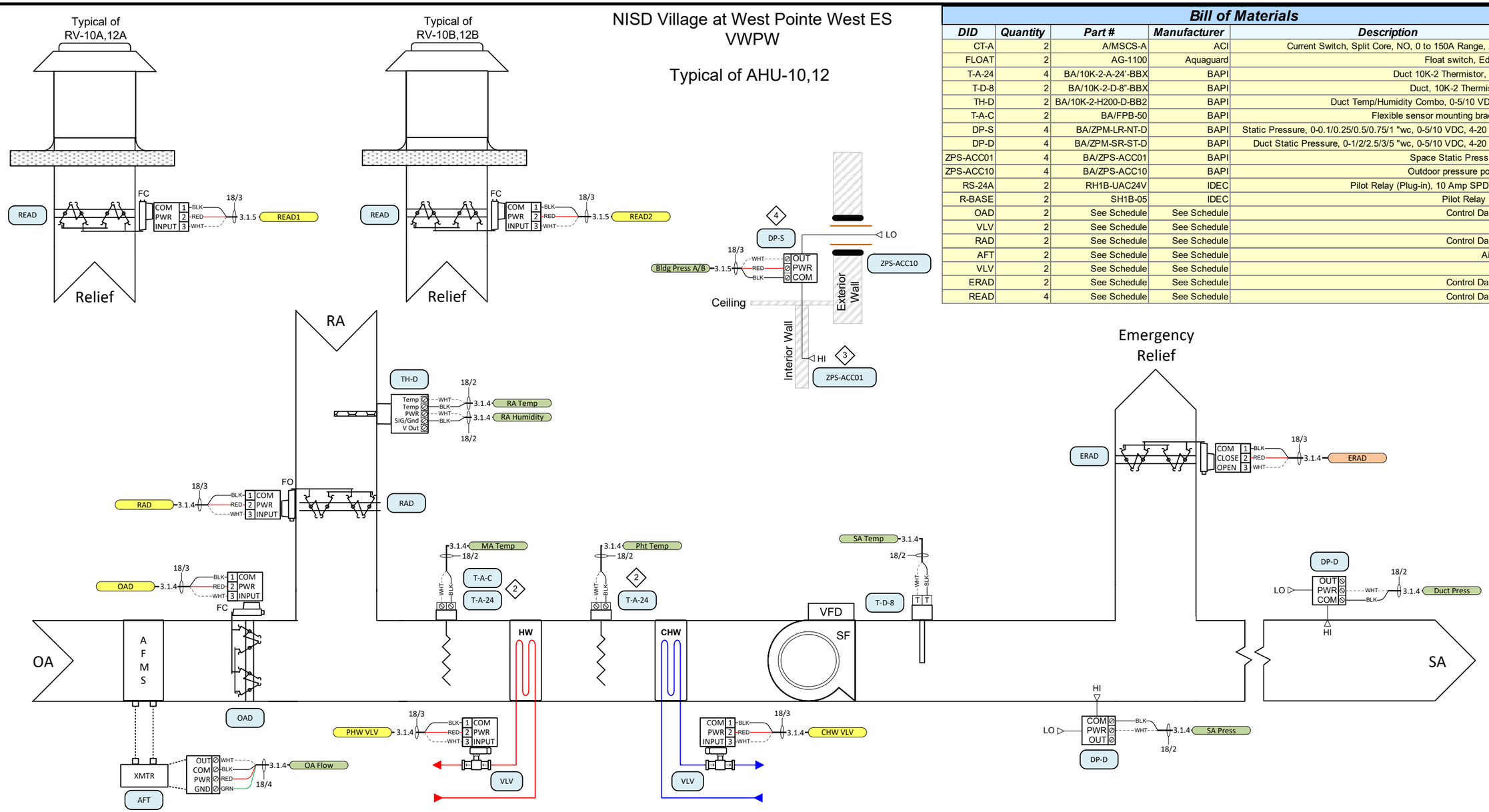


## Bill of Materials

| DID | Quantity | Part # | Manufacturer | Description |
|---|---|---|---|---|
| CT-A | 2 | A/MSCS-A | ACI | Current Switch, Split Core, NO, 0 to 150A Range, Adj. Trip Point |
| FLOAT | 2 | AG-1100 | Aquaguard | Float switch, Edge mount, NC |
| T-A-24 | 4 | BA/10K-2-A-24'-BBX | BAPI | Duct 10K-2 Thermistor, Averaging, 24' |
| T-D-8 | 2 | BA/10K-2-D-8"-BBX | BAPI | Duct, 10K-2 Thermistor, Probe, 8" |
| TH-D | 2 | BA/10K-2-H200-D-BB2 | BAPI | Duct Temp/Humidity Combo, 0-5/10 VD/4-20 mA, 2% |
| T-A-C | 2 | BA/FPB-50 | BAPI | Flexible sensor mounting bracket (50 pack) |
| DP-S | 4 | BA/ZPM-LR-NT-D | BAPI | Static Pressure, 0-0.1/0.25/0.5/0.75/1 "wc, 0-5/10 VDC, 4-20 mA, +/-0.25% |
| DP-D | 4 | BA/ZPM-SR-ST-D | BAPI | Duct Static Pressure, 0-1/2/2.5/3/5 "wc, 0-5/10 VDC, 4-20 mA, +/-0.25% |
| ZPS-ACC01 | 4 | BA/ZPS-ACC01 | BAPI | Space Static Pressure Wall Plate |
| ZPS-ACC10 | 4 | BA/ZPS-ACC10 | BAPI | Outdoor pressure port, side mount |
| RS-24A | 2 | RH1B-UAC24V | IDEC | Pilot Relay (Plug-in), 10 Amp SPDT, 24VAC Coil |
| R-BASE | 2 | SH1B-05 | IDEC | Pilot Relay (Plug-in) Base |
| OAD | 2 | See Schedule | See Schedule | Control Damper Actuator |
| VLV | 2 | See Schedule | See Schedule | Control Valve |
| RAD | 2 | See Schedule | See Schedule | Control Damper Actuator |
| AFT | 2 | See Schedule | See Schedule | Air Flow Station |
| VLV | 2 | See Schedule | See Schedule | Control Valve |
| ERAD | 2 | See Schedule | See Schedule | Control Damper Actuator |
| READ | 4 | See Schedule | See Schedule | Control Damper Actuator |

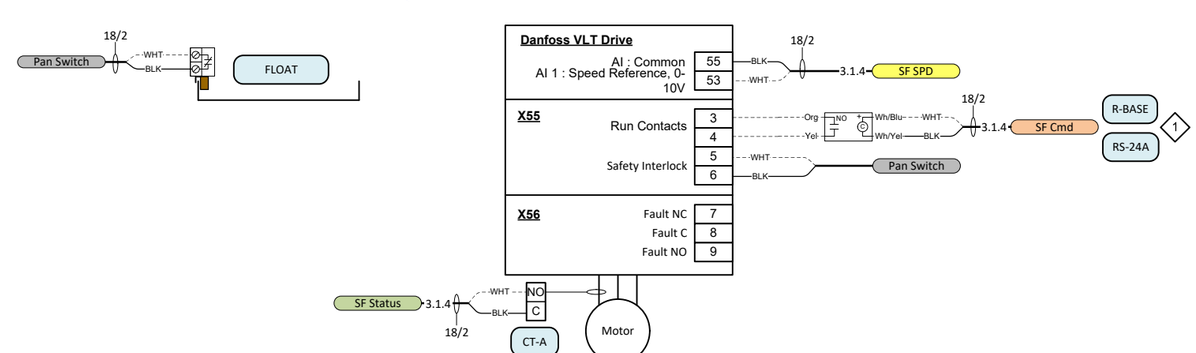


| Key Drawing Notes: | |
|---|---|
| 1 | Install relay inside control panel – see panel layout next page. Install appropriate wire from relay to field termination. |
| 2 | Install averaging sensor with sensor brackets to avoid kinks in flexible probe |
| 3 | See mechanical drawing floorplans for locations of interior building pressure sensor tap, Mount 96" AFF |
| 4 | Locate transmitter near AHU panel; Two transmitters for each Unit – A and B. |

General Notes:
1. Refer to Network Diagram and Cable Specification Chart for wiring details and control module address.
2. Coordinate with Electrical Contractor (Div. 26) to provide 120 VAC circuit power to control panels.
3. Refer to Carrier Technical Documentation for specifications on control module setup, wiring, and driver configuration

VAV AHU (T4) x2 Relief
Control Type 4

DWG # 3.1.3

JOB # VWPW

NISD Village at West Pointe West ES

San Antonio, TX

Drawn:
ENG: Dennis Schnellman

| REV # | DESCRIPTION | DATE |
|---|---|---|
| 0 | SUBMITTED | 4/28/2023 |


Yates Co
4738 Whirlwind Dr.
San Antonio, TX 78217
Phone: 2107023820

# NISD Village at West Pointe West ES
# VWPW

## Typical of AHU-10,12

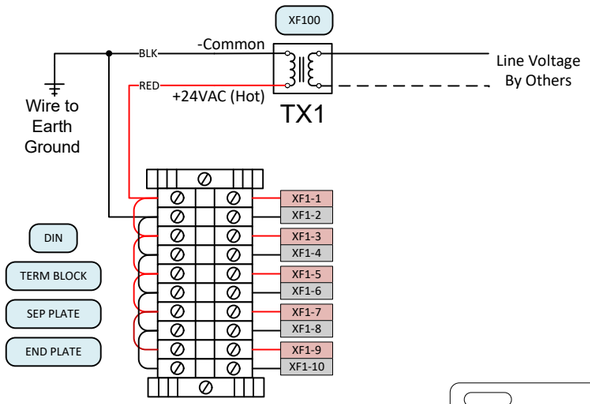


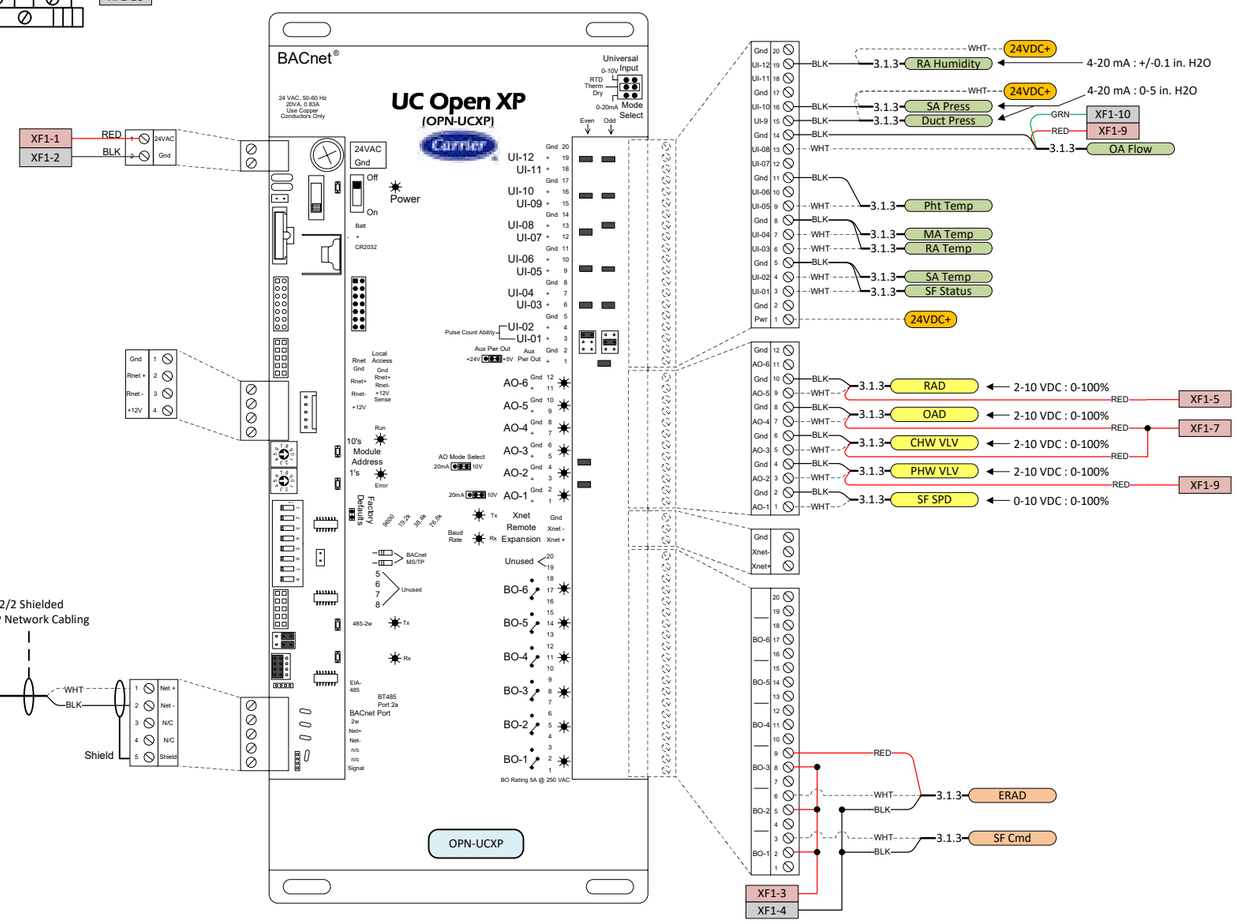


## Bill of Materials

| DID | Quantity | Part # | Manufacturer | Description |
|---|---|---|---|---|
| DIN | 2 | DRMR3 | c3controls | DIN Rail, Slotted, 1 m Length, 35 mm Width x 7.5 mm, Plated Steel |
| WD-1.5 | 2 | WD-B40X80N | c3controls | 1 1/2"W X 3"H Narrow Slot, Wiring Duct & Cover, 1pc, 6ft |
| SEP PLATE | 1 | WTB2-EB | c3controls | Separator Plates (50 pack), 8 mm, Fits 35 mm DIN Rail, Grey Non-metallic |
| END PLATE | 1 | WTB2-EPW2/4 | c3controls | Separator Plates (50 pack), 8 mm, Fits 35 mm DIN Rail, Grey Non-metallic |
| TERM BLOCK | 20 | WTB2-W2 | c3controls | Terminal Block, 5 mm width, DIN-mount |
| OPN-UCXP | 2 | OPN-UCXP | Carrier | UC Open XP (6 BO, 12 UI, 6 AO), Programmable, Multiple Equipment |
| XF100 | 2 | TR100VA001 | Functional Devices | Control Transformer (120 VAC Input - 24 VAC Output) |
| PANEL-24x24 | 2 | A24N24ALP+GRAY | Hoffman | Enclosure, Wall-mount, Hinged, Steel, NEMA1, 24"x24"x6" |
| PERF-24x24 | 2 | A24N24MPP | Hoffman | Enclosure, Perforated Back Plate, 24"x24" |
| PANEL-LOCK | 2 | AL12AR | Hoffman | Enclosure Key Lock Kit |
| SWITCH | 2 | T5225-W | Leviton | Single Pole Switch, Standard Receptacle; Self-grounding |

## Active Points List

| Point Number | Point Type | Point Name | Setup |
|---|---|---|---|
| UI-01 | DI | SF Status | DC |
| UI-02 | AI | Supply Air Temp | Therm |
| UI-03 | AI | Return Air Temp | Therm |
| UI-04 | AI | Mixed Air Temp | Therm |
| UI-05 | AI | Preheat DA Temp | Therm |
| UI-08 | AI | OA Flow | mA |
| UI-09 | AI | Duct Pressure | mA |
| UI-10 | AI | Supply Pressure | mA |
| UI-12 | AI | Return Air Humidity | mA |
| AO-1 | AO | Supply Fan Speed | Volts |
| AO-2 | AO | Preheat HW Valve | Volts |
| AO-3 | AO | CHW Valve | Volts |
| AO-4 | AO | Outside Air Damper | Volts |
| AO-5 | AO | Return Air Damper | Volts |
| BO-1 | DO | Supply Fan Cmd | Relay |
| BO-2 | DO | Emerg Relief Open | Relay |
| BO-3 | DO | Emerg Relief Close | Relay |

| Key Drawing Notes: | |
|---|---|
| 1 | Related Exhaust Fan Controller mounted in AH-12 control panel. See exhaust fan schedule for details. |
| 2 | Relief Ventilation Controller OPN-APP mounted in AH-10 & AH-12 control panel. |

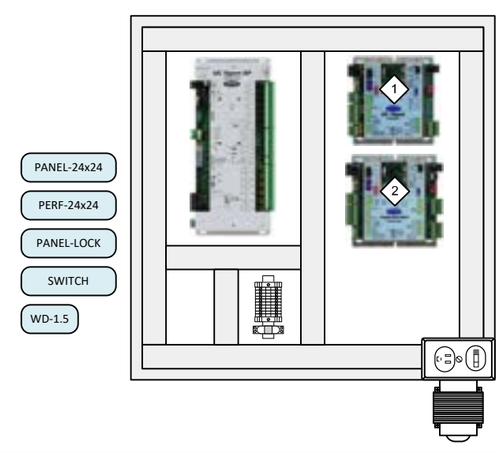


General Notes:
1. Refer to Network Diagram and Cable Specification Chart for wiring details and control module address.
2. Coordinate with Electrical Contractor (Div. 26) to provide 120 VAC circuit power to control panels.
3. Refer to Carrier Technical Documentation for specifications on control module setup, wiring, and driver configuration

VAV AHU (T4) x2 Relief Panel Control Type 4

DWG # 3.1.4

JOB # VWPW

NISD Village at West Pointe West ES

San Antonio, TX

| REV # | DESCRIPTION | DATE |
|---|---|---|
| 0 | SUBMITTED | 4/28/2023 |

Drawn:
ENG: Dennis Schnellman


Yates Co
4738 Whirlwind Dr.
San Antonio, TX 78217
Phone: 2107023820

NISD Village at West Pointe West ES
VWPW

Typical of AHU-10,12

## Bill of Materials

| DID | Quantity | Part # | Manufacturer | Description |
|---|---|---|---|---|
| OPN-APP | 2 | OPN-APP | Carrier | Prog. Controller (5 BO, 6 UI, 3 AO), 2 Equipment |

## Active Points List

| Point Number | Point Type | Point Name | Setup |
|---|---|---|---|
| IN-1 | AI | Bldg Pressure A | V |
| IN-2 | AI | Bldg Pressure B | V |
| AO-1 | AO | Relief Air Damper (A) | V |
| AO-2 | AO | Relief Air Damper (B) | V |

Install in panel with AH-10,12 main controller

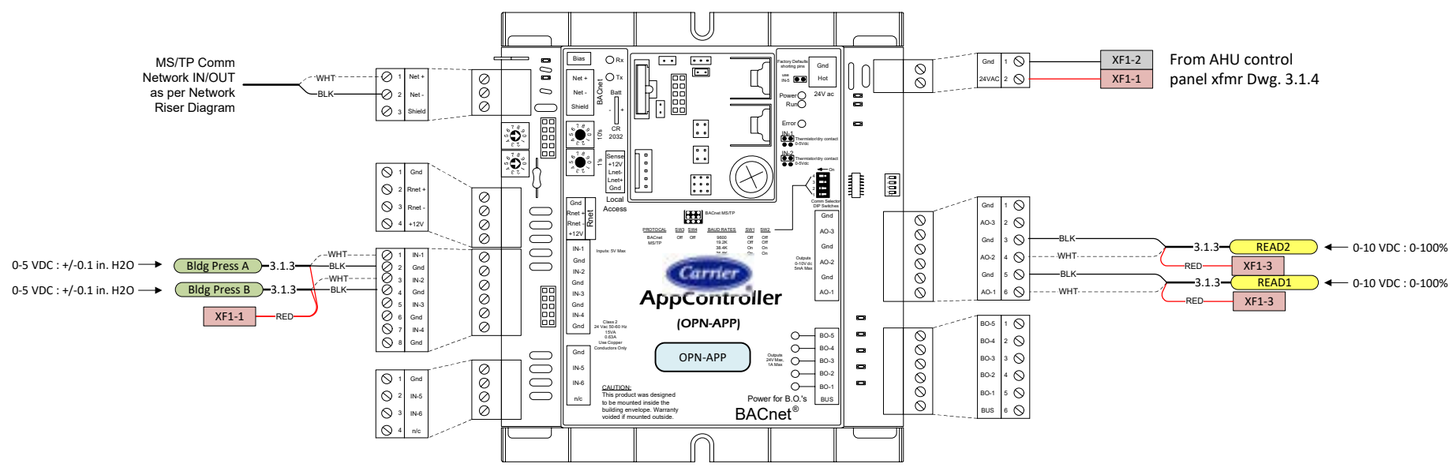


VAV AHU (T4) x2 Rel Mod
Control Type 4

DWG # 3.1.5

JOB # VWPW

NISD Village at West Pointe West ES

San Antonio, TX

Drawn:
ENG: Dennis Schnellman

| REV # | DESCRIPTION | DATE |
|---|---|---|
| 0 | SUBMITTED | 4/28/2023 |


Yates Co
4738 Whirlwind Dr.
San Antonio, TX 78217
Phone: 2107023820

## Typical of AHU-3,8,9,10,11,12,13,14

**SEQUENCE - CENTRAL AIR HANDLING UNIT:** CLASSROOM UNIT, VAV AHU WITH OUTSIDE AIR CYCLE, FOR FAN POWERED BOXES, WITH GRAVITY RELIEF

A. SEE HVAC EQUIPMENT SCHEDULE FOR AIR HANDLING UNITS WITH THIS CONTROL TYPE.

B. OPERATIONAL SEQUENCE:

B.1 OPTIMUM START AND MORNING START-UP:

a. PROVIDE OPTIMUM START, TO AUTOMATICALLY ENERGIZE THE SYSTEM FOR THE MINIMUM PERIOD NECESSARY PRIOR TO OCCUPANCY, AS REQUIRED TO ACHIEVE OCCUPIED ZONE TEMPERATURE SETPOINTS AT THE BEGINNING OF THE OCCUPIED PERIOD. DURING THIS OPERATION THE OCCUPIED MODE SHALL BE ENABLED WITH THE FOLLOWING MODIFICATIONS: THE OUTSIDE AIR DAMPER SHALL REMAIN CLOSED, THE RETURN AIR DAMPER SHALL REMAIN OPEN, AND THE ASSOCIATED EXHAUST FANS SHALL NOT BE ENABLED. ALL FAN POWERED TERMINAL UNIT SHALL BE ENABLED (WHERE APPLICABLE). THE OPTIMUM START MODE SHALL BE TERMINATED AT THE BEGINNING OF THE SYSTEM OCCUPIED MODE. THE ECONOMIZER SEQUENCE SHALL BE ALLOWED DURING OPTIMUM START WHEN OA CONDITIONS ARE FAVORABLE.

b. IN ADDITION TO THE OPTIMUM START, THE UNIT SHALL SHALL BE PROVIDED WITH A MORNING START-UP OPTION, SUCH THAT °1 HOUR BEFORE A USER DEFINED OCCUPIED START SCHEDULE, THE SYSTEM SHALL BE ENERGIZED, AND SHALL OPERATE SIMILARLY TO THE OPTIMUM START MODE.

c. THE OPTIMUM START AND MORNING START-UP MODES SHALL BE PROVIDED WITH AN ENABLED/DISABLE USER INTERFACE SWITCH ON THE GRAPHIC, TO ALLOW THE USER TO SELECT THE SYSTEM START MODE. OPTIMUM START AND MORNING START-UP SHALL NOT OPERATE SIMULTANEOUSLY.

B.2 UNIT OPERATION:

a. AHU SUPPLY FAN SHALL ENERGIZE AFTER ALL BOXES SERVED BY THE AHU ARE ENERGIZED. VSD SHALL MODULATE, AS REQUIRED TO MAINTAIN °0.5" STATIC NEAR THE END OF THE SUPPLY DUCT WITH THE LOWEST STATIC PRESSURE. SUPPLY AIR PRESSURE NEAR THE SUPPLY AIR DUCT RELIEF DAMPER IN EXCESS OF °2.5" SHALL SIGNAL AN ALARM AND MODULATE THE SUPPLY AIR DUCT RELIEF DAMPER TO MAINTAIN °2.5" SUPPLY STATIC. THE SUPPLY AIR DUCT RELIEF DAMPER IS TO PROTECT THE DUCTWORK FROM BEING OVER-PRESSURED IF THE VSD FAILS.

1. IF OUTSIDE AIR IS NOT FAVORABLE (OA ENTHALPY IS LESS THAN RA ENTHALPY AND OUTSIDE AIR TEMP IS °75F DEGREES MAXIMUM):
   a) OUTSIDE AIR AND RETURN AIR DAMPERS SHALL MODULATE AS REQUIRED TO MAINTAIN OUTSIDE AIR FLOWRATE SETPOINT.
   b) HOT WATER VALVE SHALL FULL CLOSE.
   c) SIGNAL CENTRAL PLANT FOR COOLING, IF REQUIRED.
   d) CHILLED WATER VALVE SHALL MODULATE AS REQUIRED TO PROVIDE SUPPLY AIR TEMP IN ACCORD WITH RESET SCHEDULE (55F DEG MIN).

2. ECONOMIZER - IF OUTSIDE AIR IS FAVORABLE (OA ENTHALPY IS LESS THAN RA ENTHALPY AND OA TEMP IS NOT GREATER THAN °75F DEGREES):
   a) HOT WATER VALVE SHALL FULL CLOSE.
   b) OUTSIDE AIR AND RETURN AIR DAMPERS SHALL MODULATE AS REQUIRED TO PROVIDE °50F MIXED AIR TEMPERATURE. OUTSIDE AIR FLOWRATE SHALL NOT BE REDUCED BELOW THE MINIMUM SETPOINT.
   c) IF MIXED AIR TEMPERATURE IS ABOVE °55F DEGREES:
      1) SIGNAL CENTRAL PLANT FOR COOLING.
      2) CHILLED WATER VALVE SHALL MODULATE AS REQUIRED TO PROVIDE SUPPLY AIR TEMP IN ACCORD WITH RESET SCHED (55F DEG MIN).

3. HUMIDITY CONTROL: IF RETURN AIR HUMIDITY IS ABOVE °55% RH WHILE BUILDING IS OCCUPIED, THE FOLLOWING SHALL OCCUR UNTIL THE HUMIDITY FALLS BELOW °50% RH:
   a) SIGNAL CENTRAL PLANT FOR HEATING AND LIMIT BUILDING HEATING HOT WATER TEMPERATURE TO °120F DEGREES MINIMUM.
   b) WHEN °115F DEGREE (MIN) HEATING HOT WATER IS AVAILABLE AND HOT WATER PUMP STATUS IS ACHIEVED:
      1) IF OUTSIDE AIR IS FAVORABLE, MODULATE OUTSIDE AIR AND RETURN AIR DAMPERS AS REQUIRED TO MAINTAIN °50F DEGREES MIXED AIR TEMPERATURE. OUTSIDE AIR FLOWRATE SHALL NOT BE REDUCED BELOW THE MINIMUM SETPOINT.
      2) IF MIXED AIR TEMPERATURE IS ABOVE °53F DEGREES:
         i) SIGNAL CENTRAL PLANT FOR COOLING, IF REQUIRED.
         ii) MODULATE CHILLED WATER VALVE AS REQUIRED TO PROVIDE °50F DEGREE SUPPLY AIR.

4. CO2 CONTROL: OUTSIDE AIR CFM SHALL BE CONTROLLED BETWEEN MINIMUM OA AND MAXIMUM OA PROPORTIONALLY BETWEEN MINIMUM CO2 AND MAXIMUM CO2. MAXIMUM OA, MINIMUM OA, MAXIMUM CO2, AND MINIMUM CO2 SHALL BE FROM TABLE HEREIN. FOR EACH SPACE, AHU'S SERVING MULTIPLE LISTED SPACES SHALL CONTROL OFF OF SPACE CO2 REQUIRING THE MOST OA.

5. RELIEF AIR: THE SPACE STATIC PRESSURE SENSOR SHALL MODULATE RELIEF DAMPERS TO LIMIT APPLICABLE SPACE STATIC PRESSURE TO °0.05".

6. PRE-HEAT CONTROL:
   a) PRE-HEAT VALVE SHALL ENABLE WHENEVER THE MIXED AIR TEMPERATURE IS LESS THAN °48F DEGREES.
   b) SIGNAL CENTRAL PLANT FOR HEATING.
   c) THE PRE-HEAT VALVE SHALL MODULATE AS REQUIRED TO MAINTAIN °50F DEGREE PREHEAT COIL LEAVING AIR TEMPERATURE.

7. SUPPLY AIR DUCT STATIC PRESSURE RESET:
   a) THE EMS SHALL MONITOR THE PRIMARY DAMPER POSITION OF EACH FAN POWERED BOX (FPB) UNIT ON THE AHU SYSTEM. ANY FPB WITH THE DAMPER POSITION GREATER THAN °90% OPEN SHALL RESET THE DUCT STATIC PRESSURE SETPOINT UPWARDS BY °0.10" EVERY °15 MINUTES, UNTIL NO FPB DAMPER POSITION EXCEEDS °85% OPEN. THE SYSTEM RESET SHALL NOT EXCEED THE MAX SETPOINT OF °1.20".
   b) WHEN ALL FPB DAMPER POSITIONS ARE LESS THAN °80% OPEN FOR °15 MINUTES, THE DUCT STATIC PRESSURE SETPOINT SHALL BE REDUCED BY °0.10" EVERY °15 MINUTES, UNTIL ALL FPB DAMPER POSITIONS ARE °85% OPEN OR LESS. THE MINIMUM STATIC PRESSURE SETPOINT OF °0.50" SHALL BE MAINTAINED.
   c) THE OPERATOR SHALL HAVE THE ABILITY TO REMOVE ANY FPB TERMINAL FROM THE RESET SEQUENCE THAT IS DETERMINED TO NEGATIVELY AFFECT THE PERFORMANCE OF THE AIR SYSTEM. THE ACTUAL AND EFFECTIVE DUCT STATIC PRESSURE SETPOINTS USED BY THE SEQUENCE SHALL BE DISPLAYED ON THE AHU GRAPHIC.

8. PURGE FAN INTERLOCK: FOR AHU SYSTEM THAT INCLUDES ROOM PURGE FANS, THE RA AND OA DAMPERS AT THE AHU SHALL MODULATE, AS REQUIRED TO INCREMENTALLY INCREASE THE OA FLOW RATE TO COMPENSATE FOR THE AIR BEING EXHAUSTED BY EACH ENERGIZED PURGE FAN. HOWEVER, THE TOTAL OA FLOW RATE AT THE AHU SHALL NOT EXCEED "OUTSIDE AIR CFM MAX" INDICATED ON THE EQUIPMENT SCHEDULE.

9. SUPPLY AIR TEMPERATURE RESET SCHEDULE:
   SUPPLY AIR TEMPERATURE SHALL RESET IN ACCORD WITH THE FOLLOWING SCHEDULE. AFTER THE INITIATION AND COMPLETION OF A DEHUMIDIFICATION CYCLE, THE SUPPLY AIR TEMPERATURE SHALL RESET TO °55F DEGREES FOR A PERIOD OF °120 MINUTES.

| OA TEMP, DEG F | SA TEMP, DEG F |
|---|---|
| °55 OR LOWER | °60 |
| °56 | °59 |
| °57 | °58 |
| °58 | °57 |
| °59 | °56 |
| °60 OR HIGHER | °55 |

b. AT SHUTDOWN:
   1. FAN SHALL DE-ENERGIZE.
   2. PRE-HEAT VALVE SHALL FULL CLOSE.
   3. CHILLED WATER VALVE SHALL FULL CLOSE.
   4. OUTSIDE AIR DAMPER SHALL FULL CLOSE.
   5. RETURN AIR DAMPER SHALL FULL OPEN.

B.3 FREEZE PROTECTION: ANYTIME THE MIXED AIR TEMPERATURE OR SUPPLY AIR TEMPERATURE IS BELOW °38F DEGREES:
   1. DE-ENERGIZE THE FAN.
   2. SIGNAL CENTRAL PLANT FOR HEATING, IF REQUIRED.
   3. FULL OPEN THE PRE-HEAT VALVE.
   4. FULL OPEN THE CHILLED WATER VALVE.
   5. OUTSIDE AIR DAMPER SHALL FULL CLOSE.
   6. RETURN AIR DAMPER SHALL FULL OPEN.
   7. TEMPERATURE SHALL ALARM.

C. DOC POINT SCHEDULE:

| | | | | | |
|---|---|---|---|---|---|
| RETURN AIR TEMPERATURE | 1 EACH AI | RETURN AIR DAMPER | 1 EACH AO | OUTSIDE AIR FLOW | 1 EACH AI |
| MIXED AIR TEMPERATURE | 1 EACH AI | SUPPLY DUCT RELIEF DAMPER | 1 EACH AO | SPACE CO2(S) | 1 EACH AI |
| PRE-HEAT LEAVING AIR TEMP | 1 EACH AI | BUILDING RELIEF AIR DAMPER(S) | 1 EACH AO | SUPPLY AIR DUCT END STATIC(S) | 1 EACH AI |
| SUPPLY AIR TEMPERATURE | 1 EACH AI | OUTSIDE AIR DAMPER | 1 EACH AO | FAN START/STOP | 1 EACH DO |
| SPACE STATIC PRESSURE(S)1 EACH AI | | PRE-HEAT VALVE | 1 EACH AO | FAN SPEED | 1 EACH AO |
| RETURN AIR HUMIDITY | 1 EACH AI | CHILLED WATER VALVE | 1 EACH AO | FAN CURRENT DETECTOR | 1 EACH DI |
| SUPPLY AIR DUCT RELIEF STATIC | 1 EACH AI | | | | |

* ITEMS ARE TO BE FIELD ADJUSTABLE.

VAV AHU (T4) Sequence
Control Type 4

DWG # 3.1.6

JOB # VWPW

NISD Village at West Pointe West ES

San Antonio, TX

| REV # | DATE | DESCRIPTION |
|---|---|---|
| 1 | 8/14/2023 | Revision 1 |
| 0 | 4/28/2023 | SUBMITTED |

Drawn:
ENG: Dennis Schnellman

Yates Co
4738 Whirlwind Dr.
San Antonio, TX 78217
Phone: 2107023820

# NISD Village at West Pointe West ES
# VWPW

## Typical of AHU-7

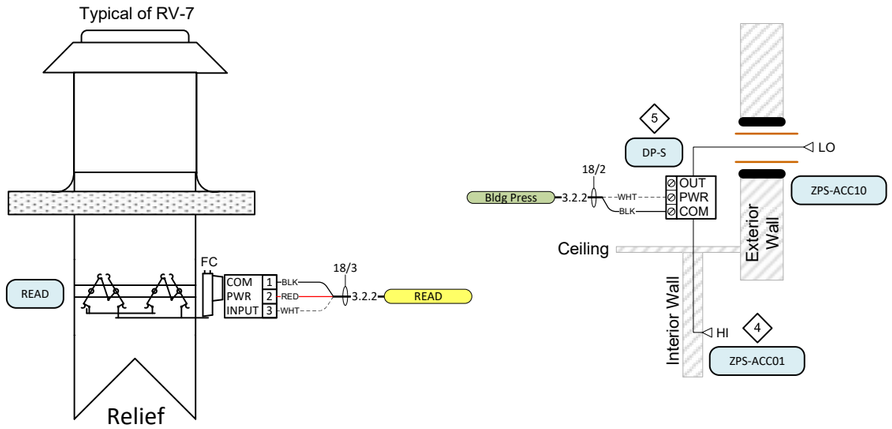


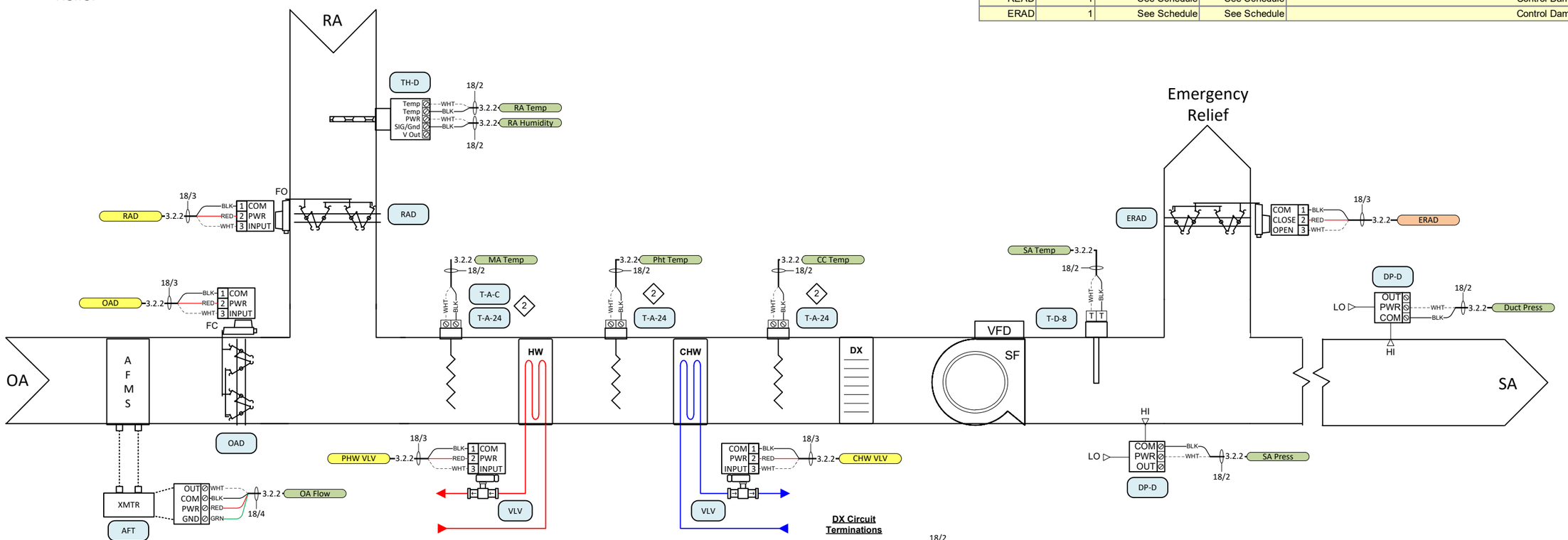


| Bill of Materials | | | | |
|---|---|---|---|---|
| DID | Quantity | Part # | Manufacturer | Description |
| CT | 2 | A/MSCS | ACI | Fixed Current Switch, Split Core, NO, 0 to 150A Range, <0.55A Trip Point |
| CT-A | 1 | A/MSCS-A | ACI | Current Switch, Split Core, NO, 0 to 150A Range, Adj. Trip Point |
| FLOAT | 1 | AG-1100 | Aquaguard | Float switch, Edge mount, NC |
| T-A-24 | 3 | BA/10K-2-A-24'-BBX | BAPI | Duct 10K-2 Thermistor, Averaging, 24' |
| T-D-8 | 1 | BA/10K-2-D-8"-BBX | BAPI | Duct, 10K-2 Thermistor, Probe, 8" |
| TH-D | 1 | BA/10K-2-H200-D-BB2 | BAPI | Duct Temp/Humidity Combo, 0-5/10 VD/4-20 mA, 2% |
| T-A-C | 1 | BA/FPB-50 | BAPI | Flexible sensor mounting bracket (50 pack) |
| DP-S | 1 | BA/ZPM-LR-NT-D | BAPI | Static Pressure, 0-0.1/0.25/0.5/0.75/1 "wc, 0-5/10 VDC, 4-20 mA, +/-0.25% |
| DP-D | 2 | BA/ZPM-SR-ST-D | BAPI | Duct Static Pressure, 0-1/2/2.5/3/5 "wc, 0-5/10 VDC, 4-20 mA, +/-0.25% |
| ZPS-ACC01 | 1 | BA/ZPS-ACC01 | BAPI | Space Static Pressure Wall Plate |
| ZPS-ACC10 | 1 | BA/ZPS-ACC10 | BAPI | Outdoor pressure port, side mount |
| RS-24A | 1 | RH1B-UAC24V | IDEC | Pilot Relay (Plug-in), 10 Amp SPDT, 24VAC Coil |
| R-BASE | 1 | SH1B-05 | IDEC | Pilot Relay (Plug-in) Base |
| OAD | 1 | See Schedule | See Schedule | Control Damper Actuator |
| VLV | 1 | See Schedule | See Schedule | Control Valve |
| RAD | 1 | See Schedule | See Schedule | Control Damper Actuator |
| AFT | 1 | See Schedule | See Schedule | Air Flow Station |
| VLV | 1 | See Schedule | See Schedule | Control Valve |
| READ | 1 | See Schedule | See Schedule | Control Damper Actuator |
| ERAD | 1 | See Schedule | See Schedule | Control Damper Actuator |

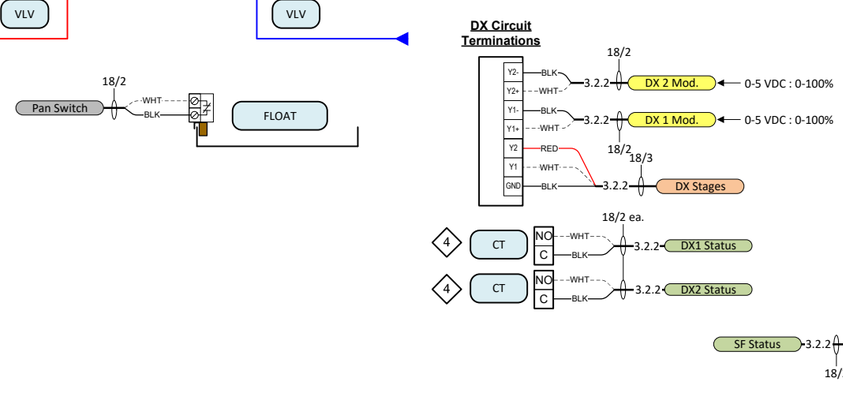


| Key Drawing Notes: | |
|---|---|
| 1 | Install relay inside control panel – see panel layout next page. Install appropriate wire from relay to field termination. |
| 2 | Install averaging sensor with sensor brackets to avoid kinks in flexible probe |
| 3 | See mechanical drawing floorplans for locations of interior building pressure sensor tap |
| 4 | Install current switch around incoming power leg |

General Notes:
1. Refer to Network Diagram and Cable Specification Chart for wiring details and control module address.
2. Coordinate with Electrical Contractor (Div. 26) to provide 120 VAC circuit power to control panels.
3. Refer to Carrier Technical Documentation for specifications on control module setup, wiring, and driver configuration

VAV AHU (T2)
Control Type 2
DWG # 3.2.1
JOB # VWPW

NISD Village at West Pointe West ES
San Antonio, TX

Drawn:
ENG: Dennis Schnellman

| REV # | DESCRIPTION | DATE |
|---|---|---|
| 2 | Revision 2 | 2/20/2024 |
| 0 | SUBMITTED | 4/28/2023 |


Yates Co
4738 Whirlwind Dr.
San Antonio, TX 78217
Phone: 2107023820

# NISD Village at West Pointe West ES
# VWPW

## Typical of AHU-7

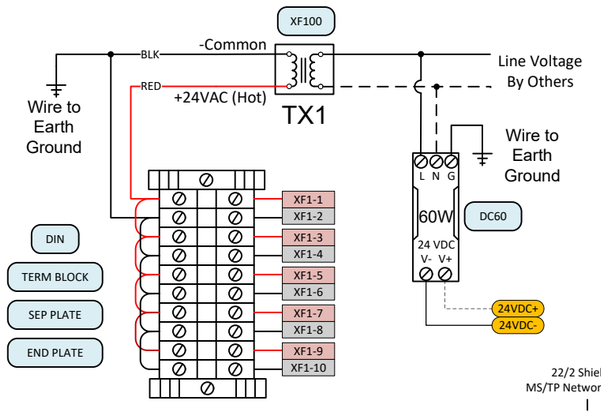


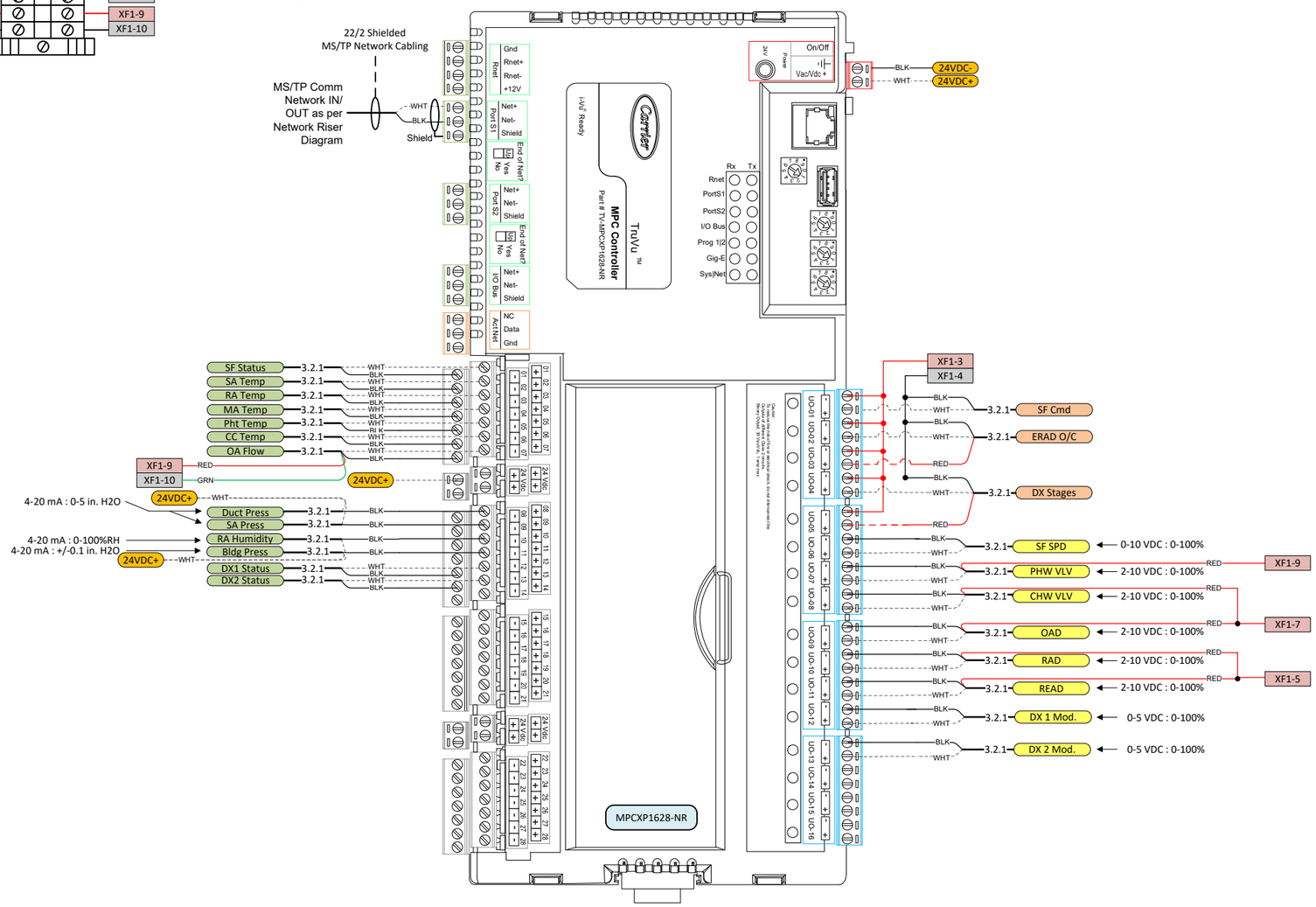


General Notes:
1. Refer to Network Diagram and Cable Specification Chart for wiring details and control module address.
2. Coordinate with Electrical Contractor (Div. 26) to provide 120 VAC circuit power to control panels.
3. Refer to Carrier Technical Documentation for specifications on control module setup, wiring, and driver configuration

### Bill of Materials

| DID | Quantity | Part # | Manufacturer | Description |
|---|---|---|---|---|
| DIN | 1 | DRMR3 | c3controls | DIN Rail, Slotted, 1 m Length, 35 mm Width x 7.5 mm, Plated Steel |
| WD-1.5 | 3 | WD-B40X80N | c3controls | 1 1/2"W X 3"H Narrow Slot, Wiring Duct & Cover, 1pc, 6ft |
| SEP PLATE | 1 | WTB2-EB | c3controls | Separator Plates (50 pack), 8 mm, Fits 35 mm DIN Rail, Grey Non-metallic |
| END PLATE | 1 | WTB2-EPW2/4 | c3controls | Separator Plates (50 pack), 8 mm, Fits 35 mm DIN Rail, Grey Non-metallic |
| TERM BLOCK | 10 | WTB2-W2 | c3controls | Terminal Block, 5 mm width, DIN-mount |
| MPCXP1628-NR | 1 | TV-MPCXP1628-NR | Carrier | TruVu MPCXP (28 UI, 16 UO); up to (9) MPC XPIO expanders; 200 Modbus; 1500 TPI BACnet |
| XF100 | 1 | TR100VA001 | Functional Devices | Control Transformer (120 VAC Input - 24 VAC Output) |
| PERF-24x24 | 1 | A24P24 | Hoffman | Enclosure, Back Plate, 24"x24" |
| PANEL-24x24 | 1 | A24R248HCLO | Hoffman | Enclosure, Wall-mount, Hinged, NEMA3R, 24"x24"x8" |
| PANEL-LOCK | 1 | AL12AR | Hoffman | Enclosure Key Lock Kit |
| DC60 | 1 | PS5R-VD24 | IDEC | 120VAC:24VDC Power Supply; 60W, 2.5A |
| SWITCH | 1 | T5225-W | Leviton | Single Pole Switch, Standard Receptacle; Self-grounding |

### Active Points List

| Point Number | Point Type | Point Name | Setup |
|---|---|---|---|
| UI-01 | DI | SF Status | DC |
| UI-02 | AI | Supply Air Temp | Therm |
| UI-03 | AI | Return Air Temp | Therm |
| UI-04 | AI | Mixed Air Temp | Therm |
| UI-05 | AI | Preheat DA Temp | Therm |
| UI-06 | AI | CC Temp | Therm |
| UI-07 | AI | OA Flow | mA |
| UI-08 | AI | Duct Pressure | mA |
| UI-09 | AI | Supply Pressure | mA |
| UI-10 | AI | Return Air Humidity | mA |
| UI-11 | AI | Bldg Pressure | mA |
| UI-12 | AI | DX 1 Status | DC |
| UI-13 | AO | DX 2 Status | DC |
| UO-1 | DO | Supply Fan Cmd | Relay |
| UO-2 | DO | Emerg Relief Open | Relay |
| UO-3 | DO | Emerg Relief Close | Relay |
| UO-4 | DO | DX 1 Stage Cmd | Relay |
| UO-5 | DO | DX 2 Stage Cmd | Relay |
| UO-6 | AO | Supply Fan Spd | Volts |
| UO-7 | AO | Pht Vlv Mod. | Volts |
| UO-8 | AO | CHW Vlv Mod. | Volts |
| UO-9 | AO | OA Damper Mod. | Volts |
| UO-10 | AO | RA Damper Mod. | Volts |
| UO-11 | AO | Relief Damper Mod. | Volts |
| UO-12 | AO | DX 1 Mod. | Volts |
| UO-13 | AO | DX 2 Mod. | Volts |

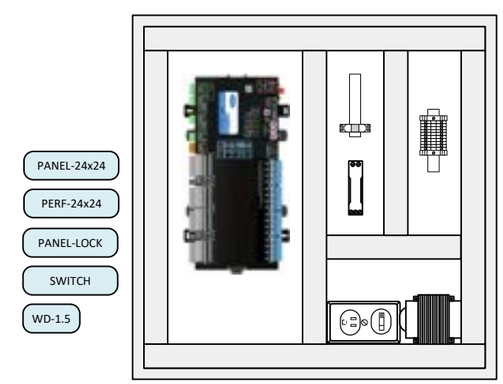


VAV AHU (T2) Panel
Control Type 2

DWG # 3.2.2

JOB # VWPW

NISD Village at West Pointe West ES

San Antonio, TX

| REV # | DATE | DESCRIPTION |
|---|---|---|
| 3 | 4/16/2024 | Revision 3 |
| 2 | 2/20/2024 | Revision 2 |
| 1 | 8/14/2023 | Revision 1 |
| 0 | 4/28/2023 | SUBMITTED |

Drawn: ENG: Dennis Schnellman


Yates Co
4738 Whirlwind Dr.
San Antonio, TX 78217
Phone: 2107023820

# Typical of AHU-7

**SEQUENCE - CENTRAL AIR HANDLING UNIT:** ADMIN UNIT, VAV AHU WITH OA CYCLE, FOR FAN POWERED BOXES, AUX DX COIL, GRAVITY RELIEF

A. SEE HVAC EQUIPMENT SCHEDULE FOR AIR HANDLING UNITS WITH THIS CONTROL TYPE.

B. OPERATIONAL SEQUENCE:

B.1 OPTIMUM START AND MORNING START-UP:

a. PROVIDE OPTIMUM START, TO AUTOMATICALLY ENERGIZE THE SYSTEM FOR THE MINIMUM PERIOD NECESSARY PRIOR TO OCCUPANCY, AS REQUIRED TO ACHIEVE OCCUPIED ZONE TEMPERATURE SETPOINTS AT THE BEGINNING OF THE OCCUPIED PERIOD. DURING THIS OPERATION THE OCCUPIED MODE SHALL BE ENABLED WITH THE FOLLOWING MODIFICATIONS: THE OUTSIDE AIR DAMPER SHALL REMAIN CLOSED, THE RETURN AIR DAMPER SHALL REMAIN OPEN, AND THE ASSOCIATED EXHAUST FANS SHALL NOT BE ENABLED. ALL FAN POWERED TERMINAL UNIT SHALL BE ENABLED (WHERE APPLICABLE). THE OPTIMUM START MODE SHALL BE TERMINATED AT THE BEGINNING OF THE SYSTEM OCCUPIED MODE. THE ECONOMIZER SEQUENCE SHALL BE ALLOWED DURING OPTIMUM START WHEN OA CONDITIONS ARE FAVORABLE.

b. IN ADDITION TO THE OPTIMUM START, THE UNIT SHALL SHALL BE PROVIDED WITH A MORNING START-UP OPTION, SUCH THAT *1 HOUR BEFORE A USER DEFINED OCCUPIED START SCHEDULE, THE SYSTEM SHALL BE ENERGIZED, AND SHALL OPERATE SIMILARLY TO THE OPTIMUM START MODE.

c. THE OPTIMUM START AND MORNING START-UP MODES SHALL BE PROVIDED WITH AN ENABLED/DISABLE USER INTERFACE SWITCH ON THE GRAPHIC, TO ALLOW THE USER TO SELECT THE SYSTEM START MODE. OPTIMUM START AND MORNING START-UP SHALL NOT OPERATE SIMULTANEOUSLY.

B.2 UNIT OPERATION:

a. AHU SUPPLY FAN SHALL ENERGIZE AFTER ALL BOXES SERVED BY THE AHU ARE ENERGIZED. VSD SHALL MODULATE, AS REQUIRED TO MAINTAIN "0.5" STATIC NEAR THE END OF THE SUPPLY DUCT WITH THE LOWEST STATIC PRESSURE. SUPPLY AIR PRESSURE NEAR THE SUPPLY AIR DUCT RELIEF DAMPER IN EXCESS OF "2.5" SHALL SIGNAL AN ALARM AND MODULATE THE SUPPLY AIR DUCT RELIEF DAMPER TO MAINTAIN "2.5" SUPPLY STATIC. THE SUPPLY AIR DUCT RELIEF DAMPER IS TO PROTECT THE DUCTWORK FROM BEING OVER-PRESSURED IF THE VSD FAILS. MINIMUM SUPPLY AIR (CFM) TO PREVENT DX COIL FROM FREEZING SHALL BE DETERMINED BY AHU MANUFACTURER AND SHALL BE SET BY CONTROLS/TAB AT VSD.

1. IF OUTSIDE AIR IS NOT FAVORABLE (OA ENTHALPY GREATER THAN RA):
   a) OUTSIDE AIR AND RETURN AIR DAMPERS SHALL MODULATE AS REQUIRED TO MAINTAIN OUTSIDE AIR SETPOINT.
   b) HOT WATER VALVE SHALL FULL CLOSE.
   c) CHILLED WATER VALVE SHALL MODULATE AS REQUIRED TO PROVIDE *55F DEGREES SUPPLY AIR.

2. ECONOMIZER - IF OUTSIDE AIR IS FAVORABLE (OA ENTHALPY IS LESS THAN RA ENTHALPY AND OUTSIDE AIR TEMP IS NOT GREATER THAN *75F DEGREES):
   a) HOT WATER VALVE SHALL FULL CLOSE.
   b) OUTSIDE AIR AND RETURN AIR DAMPERS SHALL MODULATE AS REQUIRED TO PROVIDE *50F MIXED AIR TEMPERATURE.
   c) IF MIXED AIR TEMPERATURE IS ABOVE *55F DEGREES, CHILLED WATER VALVE SHALL MODULATE AS REQUIRED TO PROVIDE *55F DEGREE SUPPLY AIR.

3. HUMIDITY CONTROL: IF RETURN AIR HUMIDITY IS ABOVE *55% RH WHILE BUILDING IS OCCUPIED, THE FOLLOWING SHALL OCCUR UNTIL THE HUMIDITY FALLS BELOW *50% RH:
   a) SIGNAL CENTRAL PLANT FOR HEATING AND LIMIT BUILDING HEATING HOT WATER TEMPERATURE TO *120F DEGREES MINIMUM.
   b) WHEN *115F DEGREE (MIN) HEATING HOT WATER IS AVAILABLE AND HOT WATER PUMP STATUS IS ACHIEVED:
      1) IF OUTSIDE AIR IF FAVORABLE, MODULATE OUTSIDE AIR AND RETURN AIR DAMPERS AS REQUIRED TO MAINTAIN *50F DEGREES MIXED AIR TEMPERATURE.
      2) IF MIXED AIR TEMPERATURE IS ABOVE *53F DEGREES, MODULATE CHILLED WATER VALVE AS REQUIRED TO PROVIDE *50F DEGREE SUPPLY AIR.

4. CO2 CONTROL: OUTSIDE AIR CFM SHALL BE CONTROLLED BETWEEN MINIMUM OA AND MAXIMUM OA PROPORTIONALLY BETWEEN MINIMUM CO2 AND MAXIMUM CO2. MAXIMUM OA, MINIMUM OA, MAXIMUM CO2, AND MINIMUM CO2 SHALL BE FROM TABLE HEREIN, FOR EACH SPACE. AHU'S SERVING MULTIPLE LISTED SPACES SHALL CONTROL OFF OF SPACE CO2 REQUIRING THE MOST OA.

5. RELIEF AIR: THE SPACE STATIC PRESSURE SENSOR SHALL MODULATE RELIEF DAMPERS TO LIMIT APPLICABLE SPACE STATIC PRESSURE TO "0.05".

6. PRE-HEAT CONTROL:
   a) PRE-HEAT VALVE SHALL ENABLE WHENEVER THE MIXED AIR TEMPERATURE IS LESS THAN *48F DEGREES.
   b) SIGNAL CENTRAL PLANT FOR HEATING.
   c) THE PRE-HEAT VALVE SHALL MODULATE AS REQUIRED TO MAINTAIN *50F DEGREE PREHEAT COIL LEAVING AIR TEMPERATURE.

7. SUPPLY AIR DUCT STATIC PRESSURE RESET:
   a) THE EMS SHALL MONITOR THE PRIMARY DAMPER POSITION OF EACH FAN POWERED BOX (FPB) UNIT ON THE AHU SYSTEM. ANY FPB WITH THE DAMPER POSITION GREATER THAN *90% OPEN SHALL RESET THE DUCT STATIC PRESSURE SETPOINT UPWARDS BY "0.10" EVERY "15 MINUTES, UNTIL NO FPB DAMPER POSITION EXCEEDS *85% OPEN. THE SYSTEM RESET SHALL NOT EXCEED THE MAX SETPOINT OF "1.20".
   b) WHEN ALL FPB DAMPER POSITIONS ARE LESS THAN *80% OPEN FOR "15 MINUTES, THE DUCT STATIC PRESSURE SETPOINT SHALL BE REDUCED BY "0.10" EVERY "15 MINUTES, UNTIL ALL FPB DAMPER POSITIONS ARE *85% OPEN OR LESS. THE MINIMUM STATIC PRESSURE SETPOINT OF "0.50" SHALL BE MAINTAINED.
   c) THE OPERATOR SHALL HAVE THE ABILITY TO REMOVE ANY FPB TERMINAL FROM THE RESET SEQUENCE THAT IS DETERMINED TO NEGATIVELY AFFECT THE PERFORMANCE OF THE AIR SYSTEM. THE ACTUAL AND EFFECTIVE DUCT STATIC PRESSURE SETPOINTS USED BY THE SEQUENCE SHALL BE DISPLAYED ON THE AHU GRAPHIC.

8. DX COIL: AUXILIARY DX COOLING SHALL BE ENABLED ANYTIME AHU CALLS FOR COOLING AND CHILLED WATER IS NOT AVAILABLE FROM CENTRAL PLANT. IFSUPPLY AIR DUCT STATIC PRESSURE FALLS BELOW "0.40" (FAN FAILURE), DISABLE DX COOLING TO PROTECT DX COIL AND FAN SHALL ALARM.

9. SUPPLY AIR TEMPERATURE RESET SCHEDULE:
SUPPLY AIR TEMPERATURE SHALL RESET IN ACCORD WITH THE FOLLOWING SCHEDULE. AFTER THE INITIATION AND COMPLETION OF A DEHUMIDIFICATION, CYCLE THE SUPPLY AIR TEMPERATURE SHALL RESET TO *55F DEGREES FOR A PERIOD OF *120 MINUTES.

| OA TEMP, DEG F | SA TEMP, DEG F |
|---|---|
| *55 OR LOWER | *60 |
| *56 | *59 |
| *57 | *58 |
| *58 | *57 |
| *59 | *56 |
| *60 OR HIGHER | *55 |

b. AT SHUTDOWN:
1. FAN SHALL DE-ENERGIZE.
2. PRE-HEAT VALVE SHALL FULL CLOSE.
3. CHILLED WATER VALVE SHALL FULL CLOSE.
4. OUTSIDE AIR DAMPER SHALL FULL CLOSE.
5. RETURN AIR DAMPER SHALL FULL OPEN.
6. DX COOLING SHALL DE-ENERGIZE.

B.3 FREEZE PROTECTION: ANYTIME THE MIXED AIR TEMPERATURE OR SUPPLY AIR TEMPERATURE BELOW *38F DEGREES:
1. DE-ENERGIZE THE FAN.
2. SIGNAL CENTRAL PLANT FOR HEATING, IF REQUIRED.
3. FULL OPEN THE PRE-HEAT VALVE.
4. FULL OPEN THE CHILLED WATER VALVE.
5. OUTSIDE AIR DAMPER SHALL FULL CLOSE.
6. RETURN AIR DAMPER SHALL FULL OPEN.
7. DX COOLING SHALL DE-ENERGIZE.
8. TEMPERATURE SHALL ALARM.

C. DDC POINT SCHEDULE:

| | | | | | |
|---|---|---|---|---|---|
| RETURN AIR TEMPERATURE | 1 EACH AI | RETURN AIR DAMPER | 1 EACH AO | OUTSIDE AIR FLOW | 1 EACH AI |
| MIXED AIR TEMPERATURE | 1 EACH AI | SUPPLY DUCT RELIEF DAMPER | 1 EACH AO | SPACE CO2(S) | 1 EACH AI |
| PRE-HEAT LEAVING AIR TEMP | 1 EACH AI | BUILDING RELIEF AIR DAMPER(S) | 1 EACH AO | SUPPLY AIR DUCT END STATIC(S) | 1 EACH AI |
| SUPPLY AIR TEMPERATURE | 1 EACH AI | OUTSIDE AIR DAMPER | 1 EACH AO | FAN START/STOP | 1 EACH DO |
| SPACE STATIC PRESSURE(S)I | EACH AI | PRE-HEAT VALVE | 1 EACH AO | FAN SPEED | 1 EACH AO |
| RETURN AIR HUMIDITY | 1 EACH AI | CHILLED WATER VALVE | 1 EACH AO | FAN CURRENT DETECTOR | 1 EACH DI |
| SUPPLY AIR DUCT RELIEF STATIC | 1 EACH AI | | | | |
| DX COMPRESSOR STATUS | 1 EACH DO PER COMP. | | | | |

* ITEMS ARE TO BE FIELD ADJUSTABLE.

VAV AHU (T2) Sequence
Control Type 2

DWG # 3.2.3

JOB # VWPW

NISD Village at West Pointe West ES

San Antonio, TX

| REV # | DESCRIPTION | DATE |
|---|---|---|
| 1 | Revision 1 | 8/14/2023 |
| 0 | SUBMITTED | 4/28/2023 |

Drawn:
ENG: Dennis Schnellman

Yates Co
4738 Whirlwind Dr.
San Antonio, TX 78217
Phone: 2107023820

# NISD Village at West Pointe West ES
# VWPW

## Typical of AHU-6

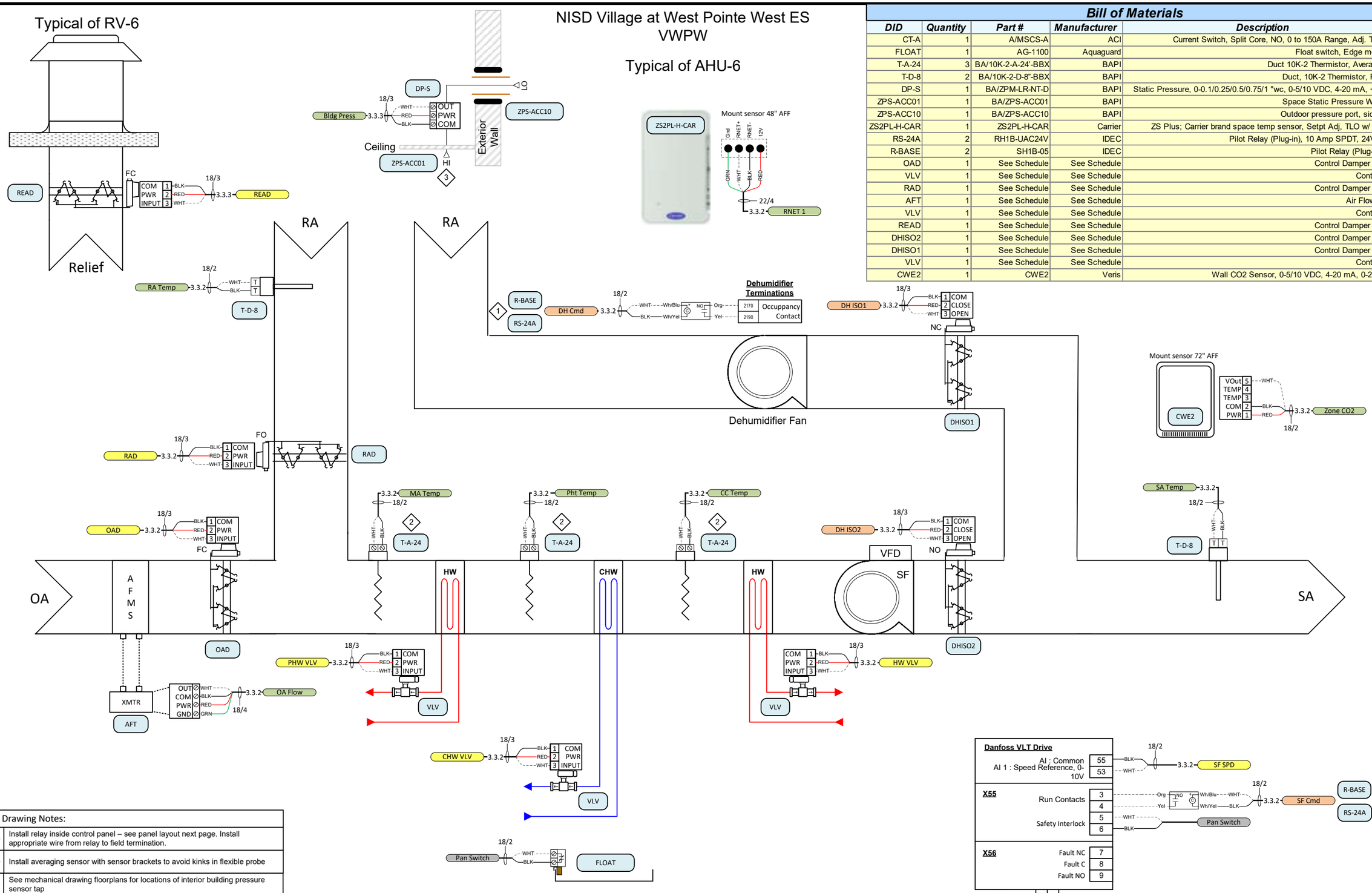


| Key Drawing Notes: | |
|---|---|
| 1 | Install relay inside control panel – see panel layout next page. Install appropriate wire from relay to field termination. |
| 2 | Install averaging sensor with sensor brackets to avoid kinks in flexible probe |
| 3 | See mechanical drawing floorplans for locations of interior building pressure sensor tap |

General Notes:
1. Refer to Network Diagram and Cable Specification Chart for wiring details and control module address.
2. Coordinate with Electrical Contractor (Div. 26) to provide 120 VAC circuit power to control panels.
3. Refer to Carrier Technical Documentation for specifications on control module setup, wiring, and driver configuration

## Bill of Materials

| DID | Quantity | Part # | Manufacturer | Description |
|---|---|---|---|---|
| CT-A | 1 | A/MSCS-A | ACI | Current Switch, Split Core, NO, 0 to 150A Range, Adj. Trip Point |
| FLOAT | 1 | AG-1100 | Aquaguard | Float switch, Edge mount, NC |
| T-A-24 | 3 | BA/10K-2-A-24'-BBX | BAPI | Duct 10K-2 Thermistor, Averaging, 24' |
| T-D-8 | 2 | BA/10K-2-D-8"-BBX | BAPI | Duct, 10K-2 Thermistor, Probe, 8" |
| DP-S | 1 | BA/ZPM-LR-NT-D | BAPI | Static Pressure, 0-0.1/0.25/0.5/0.75/1 "wc, 0-5/10 VDC, 4-20 mA, +/-0.25% |
| ZPS-ACC01 | 1 | BA/ZPS-ACC01 | BAPI | Space Static Pressure Wall Plate |
| ZPS-ACC10 | 1 | BA/ZPS-ACC10 | BAPI | Outdoor pressure port, side mount |
| ZS2PL-H-CAR | 1 | ZS2PL-H-CAR | Carrier | ZS Plus; Carrier brand space temp sensor, Setpt Adj, TLO w/ humidity |
| RS-24A | 2 | RH1B-UAC24V | IDEC | Pilot Relay (Plug-in), 10 Amp SPDT, 24VAC Coil |
| R-BASE | 2 | SH1B-05 | IDEC | Pilot Relay (Plug-in) Base |
| OAD | 1 | See Schedule | See Schedule | Control Damper Actuator |
| VLV | 1 | See Schedule | See Schedule | Control Valve |
| RAD | 1 | See Schedule | See Schedule | Control Damper Actuator |
| AFT | 1 | See Schedule | See Schedule | Air Flow Station |
| VLV | 1 | See Schedule | See Schedule | Control Valve |
| READ | 1 | See Schedule | See Schedule | Control Damper Actuator |
| DHISO2 | 1 | See Schedule | See Schedule | Control Damper Actuator |
| DHISO1 | 1 | See Schedule | See Schedule | Control Damper Actuator |
| VLV | 1 | See Schedule | See Schedule | Control Valve |
| CWE2 | 1 | CWE2 | Veris | Wall CO2 Sensor, 0-5/10 VDC, 4-20 mA, 0-2000 ppm |

SZ AHU (T3)
Control Type 3

DWG # 3.3.1

JOB # VWPW

NISD Village at West Pointe West ES

San Antonio, TX

| REV # | DESCRIPTION | DATE |
|---|---|---|
| 0 | SUBMITTED | 4/28/2023 |

Drawn: ENG: Dennis Schnellman


Yates Co
4738 Whirlwind Dr.
San Antonio, TX 78217
Phone: 2107023820

# NISD Village at West Pointe West ES
# VWPW

## Typical of AHU-6

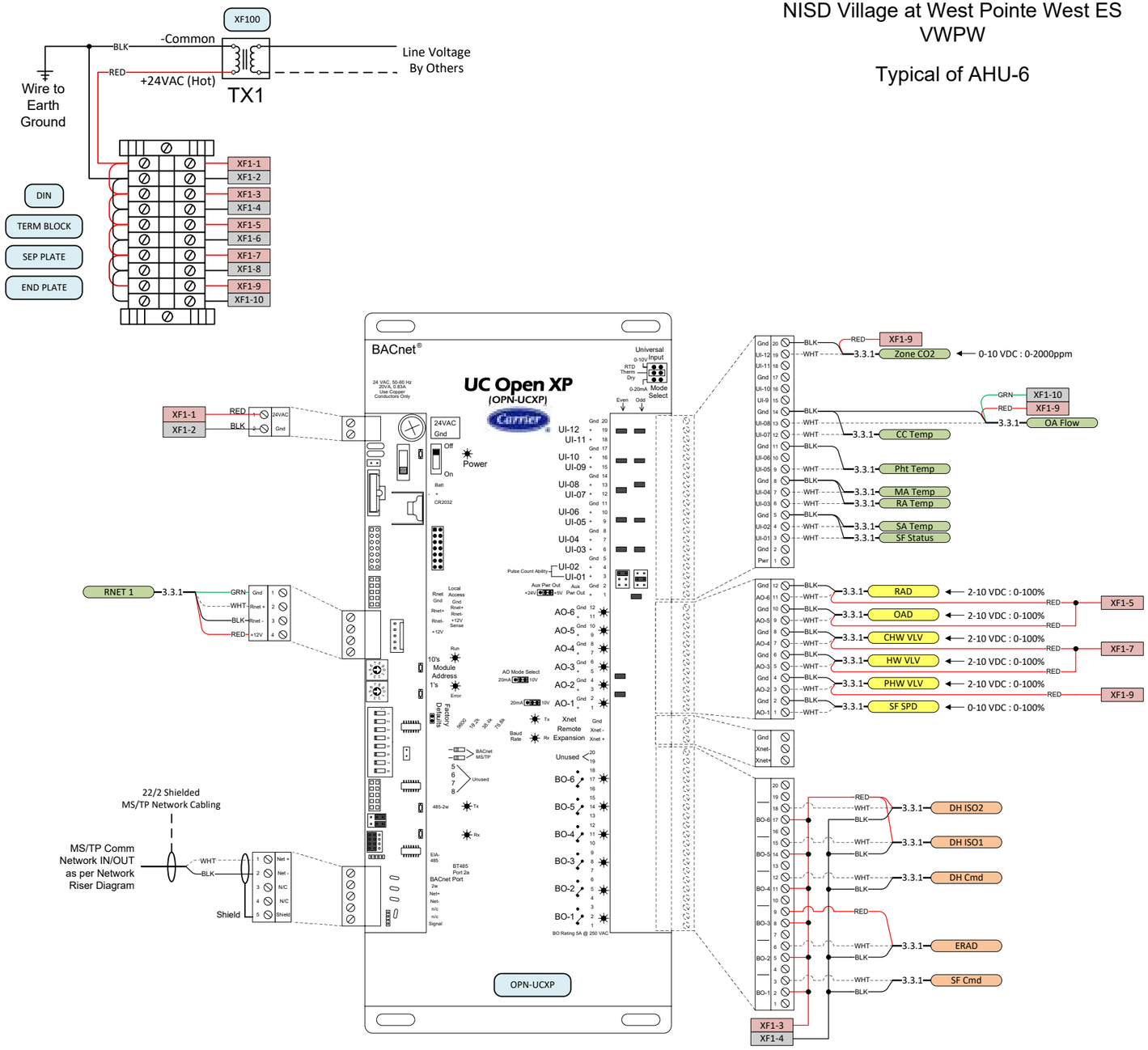


## Bill of Materials

| DID | Quantity | Part # | Manufacturer | Description |
|---|---|---|---|---|
| DIN | 1 | DRMR3 | c3controls | DIN Rail, Slotted, 1 m Length, 35 mm Width x 7.5 mm, Plated Steel |
| WD-1.5 | 3 | WD-B40X80N | c3controls | 1 1/2"W X 3"H Narrow Slot, Wiring Duct & Cover, 1pc, 6ft |
| SEP PLATE | 1 | WTB2-EB | c3controls | Separator Plates (50 pack), 8 mm, Fits 35 mm DIN Rail, Grey Non-metallic |
| END PLATE | 1 | WTB2-EPW2/4 | c3controls | Separator Plates (50 pack), 8 mm, Fits 35 mm DIN Rail, Grey Non-metallic |
| TERM BLOCK | 10 | WTB2-W2 | c3controls | Terminal Block, 5 mm width, DIN-mount |
| OPN-UCXP | 1 | OPN-UCXP | Carrier | UC Open XP (6 BO, 12 UI, 6 AO), Programmable, Multiple Equipment |
| XF100 | 1 | TR100VA001 | Functional Devices | Control Transformer (120 VAC Input - 24 VAC Output) |
| PERF-24x24 | 1 | A24P24 | Hoffman | Enclosure, Back Plate, 24"x24" |
| PANEL-24x24 | 1 | A24R248HCLO | Hoffman | Enclosure, Wall-mount, Hinged, NEMA3R, 24"x24"x8" |
| PANEL-LOCK | 1 | AL12AR | Hoffman | Enclosure Key Lock Kit |
| SWITCH | 1 | T5225-W | Leviton | Single Pole Switch, Standard Receptacle; Self-grounding |

## Active Points List

| Point Number | Point Type | Point Name | Setup |
|---|---|---|---|
| UI-01 | DI | SF Status | DC |
| UI-02 | AI | Supply Air Temp | Therm |
| UI-03 | AI | Return Air Temp | Therm |
| UI-04 | AI | Mixed Air Temp | Therm |
| UI-05 | AI | Preheat DA Temp | Therm |
| UI-07 | AI | Clg Coil DA Temp | Therm |
| UI-08 | AI | OA Flow | mA |
| UI-12 | AI | Zone CO2 Level | V |
| AO-1 | AO | Supply Fan Speed | Volts |
| AO-2 | AO | Preheat HW Valve | Volts |
| AO-3 | AO | HW Valve | Volts |
| AO-4 | AO | CHW Valve | Volts |
| AO-5 | AO | Outside Air Damper | Volts |
| AO-6 | AO | Return Air Damper | Volts |
| BO-1 | DO | Supply Fan Cmd | Relay |
| BO-2 | DO | Emerg Relief Open | Relay |
| BO-3 | DO | Emerg Relief Close | Relay |
| BO-4 | DO | DH Command | Relay |
| BO-5 | DO | DH Iso Damper 1 | Relay |
| BO-6 | DO | DH Iso Damper 2 | Relay |
| RNET | AI | Zone Temp/Humidity | RNET |

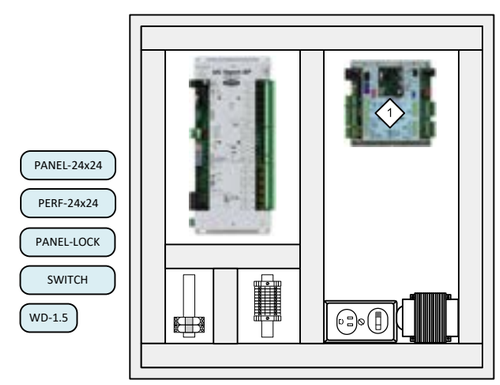


| Key Drawing Notes: | |
|---|---|
| 1 | Relief Ventilation Controller OPN-APP mounted in AH-6 control panel. |

General Notes:
1. Refer to Network Diagram and Cable Specification Chart for wiring details and control module address.
2. Coordinate with Electrical Contractor (Div. 26) to provide 120 VAC circuit power to control panels.
3. Refer to Carrier Technical Documentation for specifications on control module setup, wiring, and driver configuration

SZ AHU (T3) Panel Details
Control Type 3

DWG # 3.3.2

JOB # VWPW

NISD Village at West Pointe West ES

San Antonio, TX

Drawn:
ENG: Dennis Schnellman

| REV # | DESCRIPTION | DATE |
|---|---|---|
| 1 | Revision 1 | 8/14/2023 |
| 0 | SUBMITTED | 4/28/2023 |


Yates Co
4738 Whirlwind Dr.
San Antonio, TX 78217
Phone: 2107023820

NISD Village at West Pointe West ES
VWPW

## Bill of Materials

| DID | Quantity | Part # | Manufacturer | Description |
|---|---|---|---|---|
| OPN-APP | 1 | OPN-APP | Carrier | Prog. Controller (5 BO, 6 UI, 3 AO), 2 Equipment |

## Active Points List

| Point Number | Point Type | Point Name | Setup |
|---|---|---|---|
| IN-1 | AI | Bldg Pressure | V |
| AO-1 | AO | Relief Air Damper | V |

Install in panel with AH-6 main controller

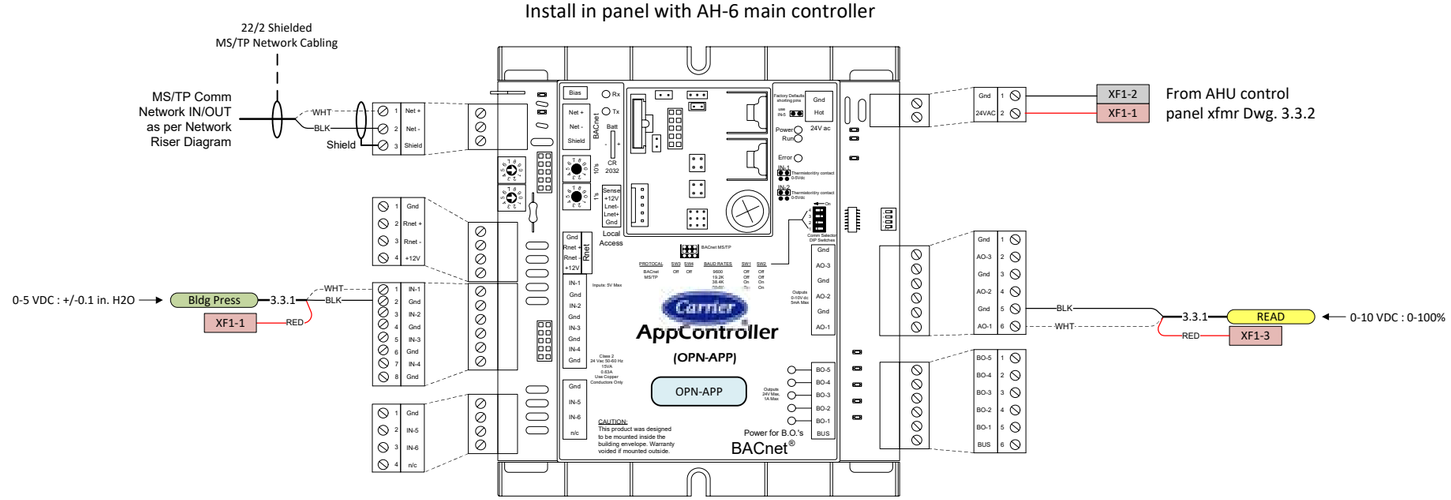


SZ AHU (T3) Relief
Control Type 3

DWG # 3.3.3

JOB # VWPW

NISD Village at West Pointe West ES

San Antonio, TX

Drawn:
ENG: Dennis Schnellman

| REV # | DESCRIPTION | DATE |
|---|---|---|
| 0 | SUBMITTED | 4/28/2023 |


Yates Co
4738 Whirlwind Dr.
San Antonio, TX 78217
Phone: 2107023820

# Typical of AHU-6

**SEQUENCE - CENTRAL AIR HANDLING UNIT**: SINGLE ZONE AHU WITH AUX DEHUMIDIFIER AND GRAVITY RELIEF

A. SEE HVAC EQUIPMENT SCHEDULE FOR AIR HANDLING UNITS WITH THIS CONTROL TYPE.

B. OPERATIONAL SEQUENCE: (*) ITEMS ARE TO BE FIELD ADJUSTABLE.

B.1 OPTIMUM START AND MORNING START-UP:

a. PROVIDE OPTIMUM START, TO AUTOMATICALLY ENERGIZE THE SYSTEM FOR THE MINIMUM PERIOD NECESSARY PRIOR TO OCCUPANCY, AS REQUIRED TO ACHIEVE OCCUPIED ZONE TEMPERATURE SETPOINTS AT THE BEGINNING OF THE OCCUPIED PERIOD. DURING THIS OPERATION THE OCCUPIED MODE SHALL BE ENABLED WITH THE FOLLOWING MODIFICATIONS: THE OUTSIDE AIR DAMPER SHALL REMAIN CLOSED, THE RETURN AIR DAMPER SHALL REMAIN OPEN, AND THE ASSOCIATED EXHAUST FANS SHALL NOT BE ENABLED. THE OPTIMUM START MODE SHALL BE TERMINATED AT THE BEGINNING OF THE SYSTEM OCCUPIED MODE. THE ECONOMIZER SEQUENCE SHALL BE ALLOWED DURING OPTIMUM START WHEN OA CONDITIONS ARE FAVORABLE.

b. IN ADDITION TO THE OPTIMUM START, THE UNIT SHALL SHALL BE PROVIDED WITH A MORNING START-UP OPTION, SUCH THAT *1 HOUR BEFORE A USER DEFINED OCCUPIED START SCHEDULE, THE SYSTEM SHALL BE ENERGIZED, AND SHALL OPERATE SIMILARLY TO THE OPTIMUM START MODE.

c. THE OPTIMUM START AND MORNING START-UP MODES SHALL BE PROVIDED WITH AN ENABLED/DISABLE USER INTERFACE SWITCH ON THE GRAPHIC, TO ALLOW THE USER TO SELECT THE SYSTEM START MODE. OPTIMUM START AND MORNING START-UP SHALL NOT OPERATE SIMULTANEOUSLY.

B.2 UNIT OPERATION:

a. AHU SUPPLY FAN SHALL BE ENERGIZED AT FULL SPEED (SCHEDULED CFM).
b. THE PARALLEL DEHUMIDIFIER SHALL DE-ENERGIZE. ITS ISOLATION DAMPER SHALL FULL CLOSE, AND THE CORRESPONDING ISOLATION DAMPER IN THE AHU SUPPLY AIR MAIN SHALL FULL OPEN.
c. OUTSIDE AIR AND RETURN AIR DAMPERS SHALL MODULATE AS REQUIRED TO MAINTAIN OUTSIDE AIR SETPOINT:

1. IF NO CALL FOR HEATING OR COOLING:
   a) CHILLED WATER VALVE SHALL FULL CLOSE.
   b) HOT WATER RE-HEAT VALVE SHALL FULL CLOSE.

2. IF SPACE CALLS FOR HEATING:
   a) CHILLED WATER VALVE SHALL FULL CLOSE.
   b) SIGNAL CENTRAL PLANT FOR HEATING.
   c) MODULATE RE-HEAT HOT WATER VALVE AS REQUIRED TO SATISFY THE SPACE.

3. IF SPACE CALLS FOR COOLING, AND OUTSIDE AIR IS NOT FAVORABLE (OA ENTHALPY GREATER THAN RA):
   a) HOT WATER RE-HEAT VALVE SHALL FULL CLOSE.
   b) SIGNAL CENTRAL PLANT FOR COOLING.
   c) CHILLED WATER VALVE SHALL MODULATE AS REQUIRED TO SATISFY THE SPACE.

4. ECONOMIZER - IF SPACE CALLS FOR COOLING AND OUTSIDE AIR IS FAVORABLE (OA ENTHALPY IS LESS THAN RA ENTHALPY AND OUTSIDE AIR TEMPERATURE IS NOT GREATER THAN *75F DEGREES):
   a) HOT WATER RE-HEAT VALVE SHALL FULL CLOSE.
   b) OUTSIDE AIR DAMPER AND RETURN AIR DAMPER SHALL MODULATE AS REQUIRED TO SATISFY THE SPACE.
   c) IF MIXED AIR TEMPERATURE IS ABOVE *55F DEGREES:
      1) SIGNAL CENTRAL PLANT FOR COOLING.
      2) CHILLED WATER VALVE SHALL MODULATE AS REQUIRED TO SATISFY SPACE.

5. HUMIDITY CONTROL: IF SPACE HUMIDITY IS ABOVE *58% RH WHILE BUILDING IS OCCUPIED, THE FOLLOWING SHALL OCCUR UNTIL THE HUMIDITY FALLS BELOW *53% RH:
   a) SIGNAL CENTRAL PLANT FOR HEATING AND LIMIT BUILDING HOT WATER SUPPLY TEMPERATURE TO *120F DEGREES (MINIMUM).
   b) WHEN *115F DEGREES (MINIMUM) HEATING HOT WATER IS AVAILABLE AND HW PUMP STATUS IS ACHIEVED:
      1) MODULATE THE HOT WATER RE-HEAT VALVE AS REQUIRED TO SATISFY THE SPACE DEHUMIDIFICATION TEMPERATURE SETPOINT, WHICH WILL BE THE AVERAGE BETWEEN THE SPACE HEATING AND SPACE COOLING SETPOINTS. DURING DEHUMIDIFICATION, LIMIT AHU SUPPLY AIR TEMPERATURE TO *75F DEGREES (MAX).
      2) IF OUTSIDE AIR IS FAVORABLE (OA ENTHALPY IS LESS THAN RA AND OUTSIDE AIR TEMPERATURE IS LESS THAN *70F DEGREES), MODULATE OUTSIDE AIR DAMPER AND RETURN AIR DAMPER, AS REQUIRED TO MAINTAIN *50F DEGREE MIXED AIR TEMPERATURE.
      3) IF MIXED AIR IS ABOVE *53F DEGREES:
         i) SIGNAL CENTRAL PLANT FOR COOLING.
         ii) MODULATE CHILLED WATER VALVE AS REQUIRED TO MAINTAIN *50F DEGREE CW COIL LEAVING AIR TEMPERATURE.
      4) COORDINATE VALVE AND DAMPER ACTUATOR SPEEDS, AS REQUIRED TO PREVENT OVERREACTION AND REDUCE ACTUATOR SPEEDS WHEN APPROACHING SETPOINT(S).

6. CO2 CONTROL: OUTSIDE AIR CFM SHALL BE CONTROLLED BETWEEN MINIMUM OA AND MAXIMUM OA PROPORTIONALLY BETWEEN MINIMUM CO2 AND MAXIMUM CO2. MAXIMUM OA, MINIMUM OA, MAXIMUM CO2, AND MINIMUM CO2 SHALL BE FROM TABLE HEREIN, FOR EACH SPACE. AHU'S SERVING MULTIPLE LISTED SPACES SHALL CONTROL OFF OF SPACE CO2 REQUIRING THE MOST OA.

7. RELIEF AIR: THE SPACE STATIC PRESSURE SENSOR SHALL MODULATE RELIEF DAMPERS TO LIMIT APPLICABLE SPACE STATIC PRESSURE TO *0.05".

8. PRE-HEAT CONTROL:
   a) PRE-HEAT VALVE SHALL ENABLE WHENEVER THE MIXED AIR TEMPERATURE IS LESS THAN *48F DEGREES.
   b) SIGNAL CENTRAL PLANT FOR HEATING.
   c) THE PRE-HEAT VALVE SHALL MODULATE AS REQUIRED TO MAINTAIN *50F DEGREE PREHEAT COIL LEAVING AIR TEMPERATURE.

9. AHU FAN AIRFLOW CONTROL: AHU SUPPLY FAN SHALL BE ENERGIZED AT FULL SPEED (SCHEDULED CFM) AND SHALL REMAIN AT FULL SPEED DURING HEATING AND DEHUMIDIFICATION MODES. SINGLE ZONE COOLING AIR HANDLING UNITS WITH FAN MOTORS 1 HP OR LARGER SHALL REDUCE FAN SPEED AS FOLLOWS: ANYTIME DURING COOLING OR ECONOMIZER MODE, FAN SPEED SHALL MODULATE BETWEEN *FULL SPEED (CHILLED WATER VALVE FULL OPEN) AND *66% FAN SPEED (CHILLED WATER VALVE 50% OPEN OR LESS). OUTSIDE AIR DAMPER AND RETURN AIR DAMPER SHALL MODULATE AS REQUIRED TO PROVIDE OUTSIDE AIR CFM SETPOINT PER CO2 CONTROL ABOVE, OVER THE ENTIRE OPERATING RANGE OF THE FAN. COORDINATE VSD, VALVE, AND DAMPER ACTUATOR SPEEDS AS REQUIRED TO PREVENT OVERREACTION AND REDUCE ACTUATOR SPEEDS WHEN APPROACHING SETPOINT(S).

d. AT SHUTDOWN:
   1. FAN SHALL DE-ENERGIZE.
   2. PRE-HEAT AND RE-HEAT HOT WATER VALVES SHALL FULL CLOSE.
   3. CHILLED WATER VALVE SHALL FULL CLOSE.
   4. OUTSIDE AIR DAMPER SHALL FULL CLOSE.
   5. RETURN AIR DAMPER SHALL FULL CLOSE.
   6. THE PARALLEL DEHUMIDIFIER SHALL BE ENABLED. ITS ISOLATION DAMPER SHALL FULL OPEN. THE CORRESPONDING ISOLATION DAMPER IN THE AHU SUPPLY AIR MAIN SHALL FULL CLOSE. THE DEHUMIDIFIER SHALL CYCLE ON THE EMS SPACE MOUNTED HUMIDISTAT, AS REQUIRED TO MAINTAIN *50% TO *55% RH.

B.3 FREEZE PROTECTION:

a. ANYTIME THE MIXED AIR TEMPERATURE OR CW COIL LEAVING AIR TEMPERATURE IS BELOW *42F DEGREES:
   1. ENERGIZE THE FAN.
   2. SIGNAL CENTRAL PLANT FOR HEATING.
   3. FULL OPEN THE PRE-HEAT AND RE-HEAT HOT WATER VALVES.
   4. FULL CLOSE THE CHILLED WATER VALVE.
   5. OUTSIDE AIR DAMPER SHALL FULL CLOSE.
   6. RETURN AIR DAMPER SHALL FULL OPEN.

b. AT MIXED AIR OR CW COIL LEAVING AIR TEMP BELOW *38F DEGREES, THE SEQUENCE SHALL BE THE SAME AS FOR BELOW *42F DEGREES SPACE, EXCEPT:
   1. DE-ENERGIZE FAN.
   2. FULL OPEN THE CHILLED WATER VALVE.
   3. TEMPERATURE SHALL ALARM.

C. DDC POINT SCHEDULE:

| | | | | | |
|---|---|---|---|---|---|
| | | | | DEHUMIDIFIER CT | 1 EACH DO |
| RETURN AIR TEMPERATURE | 1 EACH AI | BUILDING RELIEF AIR DAMPER(S) | 1 EACH AO | OUTSIDE AIR DAMPER | 1 EACH AO |
| PRE-HEAT HOT WATER VALVE | 1 EACH AO | OUTSIDE AIR FLOW | 1 EACH AI | MIXED AIR TEMPERATURE | 1 EACH AI |
| FAN START/STOP | 1 EACH DO | CW COIL LEAVING AIR TEMP | 1 EACH AI | FAN SPEED | 1 EACH AO |
| SPACE CO2 | 1 EACH AI | SUPPLY AIR TEMPERATURE | 1 EACH AI | RE-HEAT HOT WATER VALVE | 1 EACH AO |
| CHILLED WATER VALVE | 1 EACH AO | RETURN AIR DAMPER | 1 EACH AO | SPACE HUMIDITY | 1 EACH AI |
| FAN CURRENT DETECTOR | 1 EACH DI | SPACE TEMPERATURE | 1 EACH AI | PRE-HEAT AIR TEMPERATURE | 1 EACH AI |
| DEHUMIDIFIER ISO DAMPERS | 1 EACH DO | DEHUMIDIFIER ENABLE/DISABLE | 1 EACH DO | SPACE STATIC PRESSURE | 1 EACH AI |

SZ AHU (T3) Sequence
Control Type 3

DWG # 3.3.4

JOB # VWPW

NISD Village at West Pointe West ES

San Antonio, TX

| REV # | DATE | DESCRIPTION |
|---|---|---|
| 1 | 8/14/2023 | Revision 1 |
| 0 | 4/28/2023 | SUBMITTED |

Drawn:
ENG: Dennis Schnellman

Yates Co
4738 Whirlwind Dr.
San Antonio, TX 78217
Phone: 2107023820

# NISD Village at West Pointe West ES
# VWPW

## Typical of AHU-2,4,5

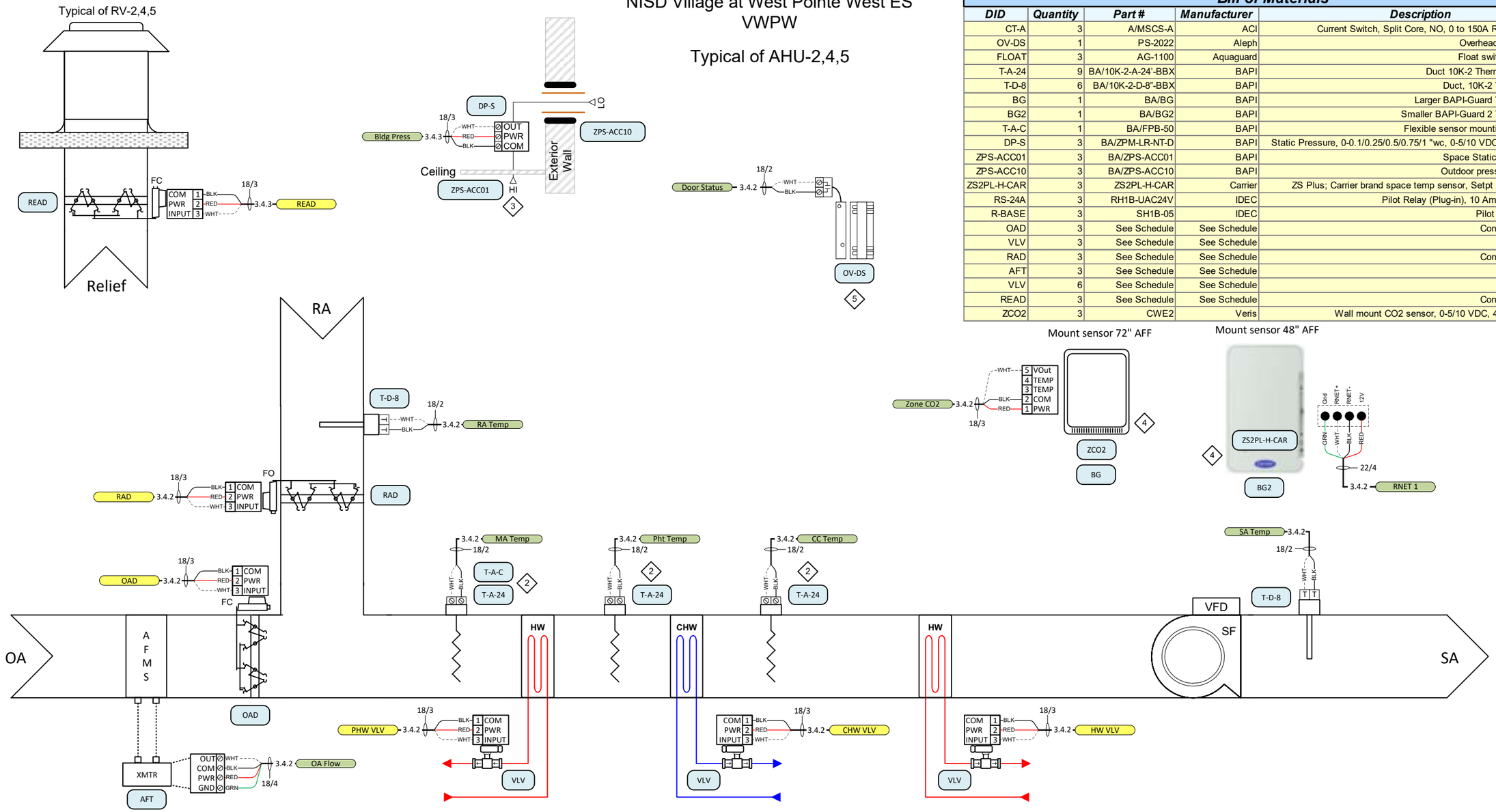


| Key Drawing Notes: | |
|---|---|
| 1 | Install relay inside control panel – see panel layout this page. Install appropriate wire from relay to field termination. |
| 2 | Install averaging sensor with sensor brackets to avoid kinks in flexible probe |
| 3 | See mechanical drawing floorplans for locations of interior building pressure sensor tap |
| 4 | Install wire guard over space sensors for AH-5 only. |
| 5 | Overhead door switch for AH-5 only. |

General Notes:
1. Refer to Network Diagram and Cable Specification Chart for wiring details and control module address.
2. Coordinate with Electrical Contractor (Div. 26) to provide 120 VAC circuit power to control panels.
3. Refer to Carrier Technical Documentation for specifications on control module setup, wiring, and driver configuration

## Bill of Materials

| DID | Quantity | Part # | Manufacturer | Description |
|---|---|---|---|---|
| CT-A | 3 | A/MSCS-A | ACI | Current Switch, Split Core, NO, 0 to 150A Range, Adj. Trip Point |
| OV-DS | 1 | PS-2022 | Aleph | Overhead door contact, SPDT |
| FLOAT | 3 | AG-1100 | Aquaguard | Float switch, Edge mount, NC |
| T-A-24 | 9 | BA/10K-2-A-24'-BBX | BAPI | Duct 10K-2 Thermistor, Averaging, 24' |
| T-D-8 | 6 | BA/10K-2-D-8"-BBX | BAPI | Duct, 10K-2 Thermistor, Probe, 8" |
| BG | 1 | BA/BG | BAPI | Larger BAPI-Guard Thermostat Protector |
| BG2 | 1 | BA/BG2 | BAPI | Smaller BAPI-Guard 2 Thermostat Protector |
| T-A-C | 1 | BA/FPB-50 | BAPI | Flexible sensor mounting bracket (50 pack) |
| DP-S | 3 | BA/ZPM-LR-NT-D | BAPI | Static Pressure, 0-0.1/0.25/0.5/0.75/1 "wc, 0-5/10 VDC, 4-20 mA, +/-0.25% |
| ZPS-ACC01 | 3 | BA/ZPS-ACC01 | BAPI | Space Static Pressure Wall Plate |
| ZPS-ACC10 | 3 | BA/ZPS-ACC10 | BAPI | Outdoor pressure port, side mount |
| ZS2PL-H-CAR | 3 | ZS2PL-H-CAR | Carrier | ZS Plus; Carrier brand space temp sensor, Setpt Adj, TLO w/ humidity |
| RS-24A | 3 | RH1B-UAC24V | IDEC | Pilot Relay (Plug-in), 10 Amp SPDT, 24VAC Coil |
| R-BASE | 3 | SH1B-05 | IDEC | Pilot Relay (Plug-in) Base |
| OAD | 3 | See Schedule | See Schedule | Control Damper Actuator |
| VLV | 3 | See Schedule | See Schedule | Control Valve |
| RAD | 3 | See Schedule | See Schedule | Control Damper Actuator |
| AFT | 3 | See Schedule | See Schedule | Air Flow Station |
| VLV | 6 | See Schedule | See Schedule | Control Valve |
| READ | 3 | See Schedule | See Schedule | Control Damper Actuator |
| ZCO2 | 3 | CWE2 | Veris | Wall mount CO2 sensor, 0-5/10 VDC, 4-20 mA, 0-2000 ppm |

SZ AHU (T1)
Control Type 1
DWG # 3.4.1
JOB # VWPW

NISD Village at West Pointe West ES
San Antonio, TX

| REV # | DESCRIPTION | DATE | |
|---|---|---|---|
| 0 | SUBMITTED | 4/28/2023 | Drawn: ENG: Dennis Schnellman |


Yates Co
4738 Whirlwind Dr.
San Antonio, TX 78217
Phone: 2107023820

# NISD Village at West Pointe West ES
# VWPW

## Typical of AHU-2,4,5

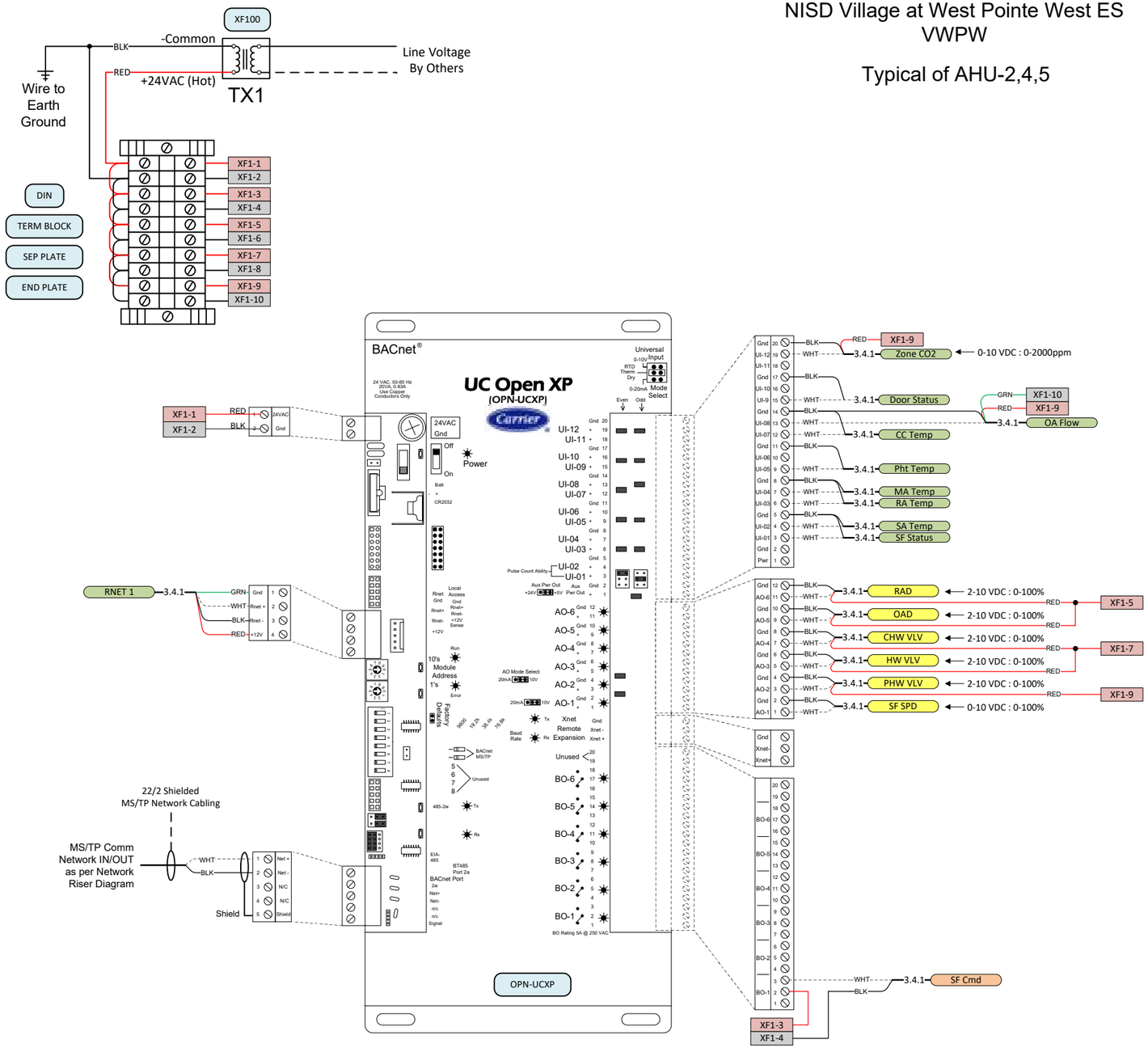


## Bill of Materials

| DID | Quantity | Part # | Manufacturer | Description |
|---|---|---|---|---|
| DIN | 3 | DRMR3 | c3controls | DIN Rail, Slotted, 1 m Length, 35 mm Width x 7.5 mm, Plated Steel |
| WD-1.5 | 3 | WD-B40X80N | c3controls | 1 1/2"W X 3"H Narrow Slot, Wiring Duct & Cover, 1pc, 6ft |
| SEP PLATE | 1 | WTB2-EB | c3controls | Separator Plates (50 pack), 8 mm, Fits 35 mm DIN Rail, Grey Non-metallic |
| END PLATE | 1 | WTB2-EPW2/4 | c3controls | Separator Plates (50 pack), 8 mm, Fits 35 mm DIN Rail, Grey Non-metallic |
| TERM BLOCK | 30 | WTB2-W2 | c3controls | Terminal Block, 5 mm width, DIN-mount |
| OPN-UCXP | 3 | OPN-UCXP | Carrier | UC Open XP (6 BO, 12 UI, 6 AO), Programmable, Multiple Equipment |
| XF100 | 3 | TR100VA001 | Functional Devices | Control Transformer (120 VAC Input - 24 VAC Output) |
| PERF-24x24 | 3 | A24P24 | Hoffman | Enclosure, Back Plate, 24"x24" |
| PANEL-24x24 | 3 | A24R248HCLO | Hoffman | Enclosure, Wall-mount, Hinged, NEMA3R, 24"x24"x8" |
| PANEL-LOCK | 3 | AL12AR | Hoffman | Enclosure Key Lock Kit |
| SWITCH | 3 | T5225-W | Leviton | Single Pole Switch, Standard Receptacle; Self-grounding |

## Active Points List

| Point Number | Point Type | Point Name | Setup |
|---|---|---|---|
| UI-01 | DI | SF Status | DC |
| UI-02 | AI | Supply Air Temp | Therm |
| UI-03 | AI | Return Air Temp | Therm |
| UI-04 | AI | Mixed Air Temp | Therm |
| UI-05 | AI | Preheat DA Temp | Therm |
| UI-07 | AI | Clg Coil DA Temp | Therm |
| UI-08 | AI | OA Flow | mA |
| UI-09 | DI | Door Status | DC |
| UI-12 | AI | Zone CO2 Level | V |
| AO-1 | AO | Supply Fan Speed | Volts |
| AO-2 | AO | Preheat HW Valve | Volts |
| AO-3 | AO | HW Valve | Volts |
| AO-4 | AO | CHW Valve | Volts |
| AO-5 | AO | Outside Air Damper | Volts |
| AO-6 | AO | Return Air Damper | Volts |
| BO-1 | DO | Supply Fan Cmd | Relay |
| RNET | AI | Zone Temp/Humidity | RNET |

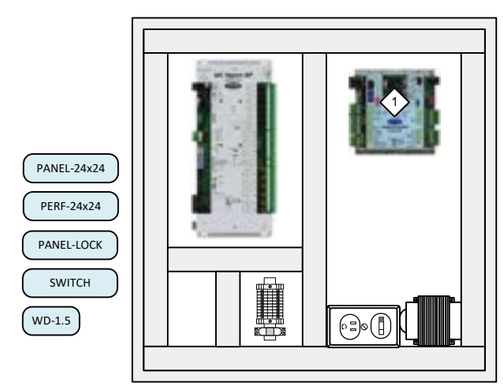


| Key Drawing Notes: | |
|---|---|
| 1 | Relief Ventilation Controller OPN-APP mounted in AH-2,4,5 control panel. |

General Notes:
1. Refer to Network Diagram and Cable Specification Chart for wiring details and control module address.
2. Coordinate with Electrical Contractor (Div. 26) to provide 120 VAC circuit power to control panels.
3. Refer to Carrier Technical Documentation for specifications on control module setup, wiring, and driver configuration

SZ AHU (T1) Panel Details
Control Type 1

DWG # 3.4.2

JOB # VWPW

NISD Village at West Pointe West ES

San Antonio, TX

Drawn:
ENG: Dennis Schnellman

| REV # | DESCRIPTION | DATE |
|---|---|---|
| 1 | Revision 1 | 8/14/2023 |
| 0 | SUBMITTED | 4/28/2023 |


Yates Co
4738 Whirlwind Dr.
San Antonio, TX 78217
Phone: 2107023820

NISD Village at West Pointe West ES
VWPW

## Bill of Materials

| DID | Quantity | Part # | Manufacturer | Description |
|---|---|---|---|---|
| OPN-APP | 3 | OPN-APP | Carrier | Prog. Controller (5 BO, 6 UI, 3 AO), 2 Equipment |

### Active Points List

| Point Number | Point Type | Point Name | Setup |
|---|---|---|---|
| IN-1 | AI | Bldg Pressure | V |
| AO-1 | AO | Relief Air Damper | V |

Install in panel with AH-2,4,5 main controller

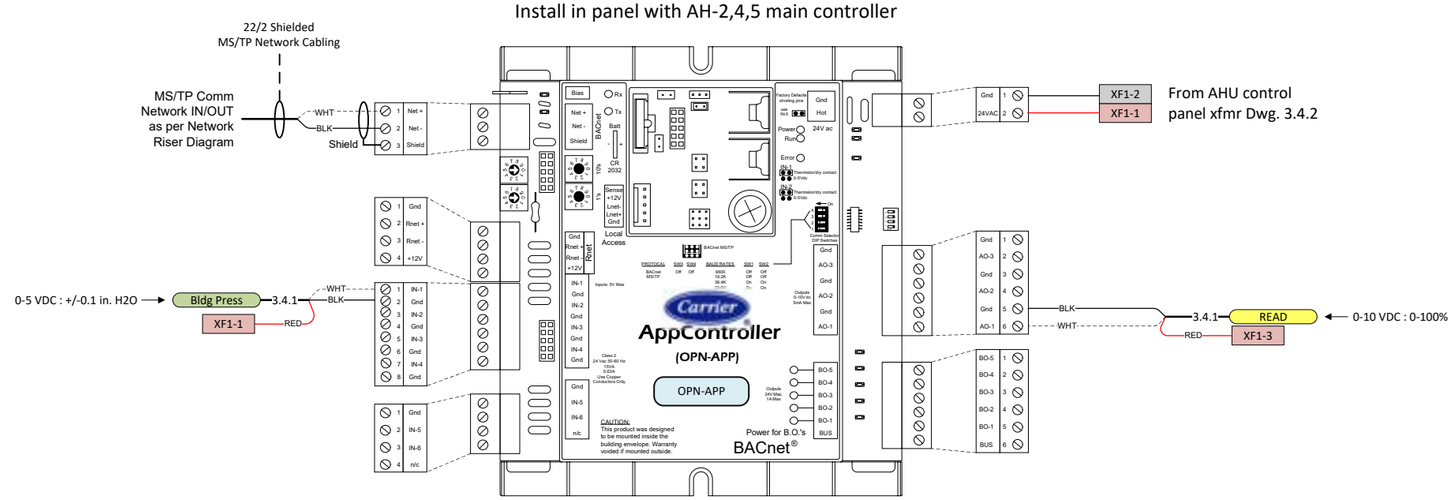


SZ AHU (T1) Relief
Control Type 1

DWG # 3.4.3

JOB # VWPW

NISD Village at West Pointe West ES

San Antonio, TX

Drawn:
ENG: Dennis Schnelman

| REV # | DESCRIPTION | DATE |
|---|---|---|
| 0 | SUBMITTED | 4/28/2023 |


Yates Co
4738 Whirlwind Dr.
San Antonio, TX 78217
Phone: 2107023820

## Typical of AHU-2,4,5

**SEQUENCE - CENTRAL AIR HANDLING UNIT:** SINGLE ZONE AHU WITH OUTSIDE AIR CYCLE AND GRAVITY RELIEF

A. SEE HVAC EQUIPMENT SCHEDULE FOR AIR HANDLING UNITS WITH THIS CONTROL TYPE.

B. OPERATIONAL SEQUENCE: (*) ITEMS ARE TO BE FIELD ADJUSTABLE.

B.1 OPTIMUM START AND MORNING START-UP:

a. PROVIDE OPTIMUM START, TO AUTOMATICALLY ENERGIZE THE SYSTEM FOR THE MINIMUM PERIOD NECESSARY PRIOR TO OCCUPANCY, AS REQUIRED TO ACHIEVE OCCUPIED ZONE TEMPERATURE SETPOINTS AT THE BEGINNING OF THE OCCUPIED PERIOD. DURING THIS OPERATION THE OCCUPIED MODE SHALL BE ENABLED WITH THE FOLLOWING MODIFICATIONS: THE OUTSIDE AIR DAMPER SHALL REMAIN CLOSED, THE RETURN AIR DAMPER SHALL REMAIN OPEN, AND THE ASSOCIATED EXHAUST FANS SHALL NOT BE ENABLED. THE OPTIMUM START MODE SHALL BE TERMINATED AT THE BEGINNING OF THE SYSTEM OCCUPIED MODE. THE ECONOMIZER SEQUENCE SHALL BE ALLOWED DURING OPTIMUM START WHEN OA CONDITIONS ARE FAVORABLE.

b. IN ADDITION TO THE OPTIMUM START, THE UNIT SHALL SHALL BE PROVIDED WITH A MORNING START-UP OPTION, SUCH THAT *1 HOUR BEFORE A USER DEFINED OCCUPIED START SCHEDULE, THE SYSTEM SHALL BE ENERGIZED, AND SHALL OPERATE SIMILARLY TO THE OPTIMUM START MODE.

c. THE OPTIMUM START AND MORNING START-UP MODES SHALL BE PROVIDED WITH AN ENABLED/DISABLE USER INTERFACE SWITCH ON THE GRAPHIC, TO ALLOW THE USER TO SELECT THE SYSTEM START MODE. OPTIMUM START AND MORNING START-UP SHALL NOT OPERATE SIMULTANEOUSLY.

B.2 UNIT OPERATION:

a. AHU SUPPLY FAN SHALL BE ENERGIZED AT FULL SPEED (SCHEDULED CFM).

b. OUTSIDE AIR AND RETURN AIR DAMPERS SHALL MODULATE AS REQUIRED TO MAINTAIN OUTSIDE AIR SETPOINT:

1. IF NO CALL FOR HEATING OR COOLING:
   a) CHILLED WATER VALVE SHALL FULL CLOSE.
   b) HOT WATER RE-HEAT VALVE SHALL FULL CLOSE.

2. IF SPACE CALLS FOR HEATING:
   a) CHILLED WATER VALVE SHALL FULL CLOSE.
   b) SIGNAL CENTRAL PLANT FOR HEATING.
   c) MODULATE RE-HEAT HOT WATER VALVE AS REQUIRED TO SATISFY THE SPACE.

3. IF SPACE CALLS FOR COOLING, AND OUTSIDE AIR IS NOT FAVORABLE (OA ENTHALPY GREATER THAN RA):
   a) HOT WATER RE-HEAT VALVE SHALL FULL CLOSE.
   b) SIGNAL CENTRAL PLANT FOR COOLING.
   c) CHILLED WATER VALVE SHALL MODULATE AS REQUIRED TO SATISFY THE SPACE.

4. ECONOMIZER - IF SPACE CALLS FOR COOLING AND OUTSIDE AIR IS FAVORABLE (OA ENTHALPY IS LESS THAN RA ENTHALPY AND OUTSIDE AIR TEMPERATURE IS NOT GREATER THAN *75F DEGREES):
   a) HOT WATER RE-HEAT VALVE SHALL FULL CLOSE.
   b) OUTSIDE AIR DAMPER AND RETURN AIR DAMPER SHALL MODULATE AS REQUIRED TO SATISFY THE SPACE.
   c) IF MIXED AIR TEMPERATURE IS ABOVE *55F DEGREES:
      1) SIGNAL CENTRAL PLANT FOR COOLING.
      2) CHILLED WATER VALVE SHALL MODULATE AS REQUIRED TO SATISFY SPACE.

5. HUMIDITY CONTROL: IF SPACE HUMIDITY IS ABOVE *58% RH WHILE BUILDING IS OCCUPIED, THE FOLLOWING SHALL OCCUR UNTIL THE HUMIDITY FALLS BELOW *53% RH:
   a) SIGNAL CENTRAL PLANT FOR HEATING AND LIMIT BUILDING HOT WATER SUPPLY TEMPERATURE TO *120F DEGREES (MINIMUM).
   b) WHEN *115F DEGREES (MINIMUM) HEATING HOT WATER IS AVAILABLE AND HW PUMP STATUS IS ACHIEVED:
      1) MODULATE THE HOT WATER RE-HEAT VALVE AS REQUIRED TO SATISFY THE SPACE DEHUMIDIFICATION TEMPERATURE SETPOINT, WHICH WILL BE THE AVERAGE BETWEEN THE SPACE HEATING AND SPACE COOLING SETPOINTS. DURING DEHUMIDIFICATION, LIMIT AHU SUPPLY AIR TEMPERATURE TO *75F DEGREES (MAX).
      2) IF OUTSIDE AIR IS FAVORABLE (OA ENTHALPY IS LESS THAN RA AND OUTSIDE AIR TEMPERATURE IS LESS THAN *70F DEGREES), MODULATE OUTSIDE AIR DAMPER AND RETURN AIR DAMPER, AS REQUIRED TO MAINTAIN *50F DEGREE MIXED AIR TEMPERATURE.
      3) IF MIXED AIR IS ABOVE *53F DEGREES:
         i) SIGNAL CENTRAL PLANT FOR COOLING.
         ii) MODULATE CHILLED WATER VALVE AS REQUIRED TO MAINTAIN *50F DEGREE CW COIL LEAVING AIR TEMPERATURE.
      4) COORDINATE VALVE AND DAMPER ACTUATOR SPEEDS, AS REQUIRED TO PREVENT OVERREACTION AND REDUCE ACTUATOR SPEEDS WHEN APPROACHING SETPOINT(S).

1

c) AHU'S SERVING GYMNASIUMS WITH WOOD FLOORING SHALL BE ENABLED TO ENERGIZE AND PERFORM THIS DEHUMIDIFICATION CYCLE DURING UNOCCUPIED PERIODS. THIS INCLUDES ENERGIZING THE CENTRAL PLANT. DURING UNOCCUPIED PERIODS, THE CYCLE SHALL INITIATE WHEN THE SPACE HUMIDITY IS ABOVE *60% RH, AND SHALL REMAIN OPERATING UNTIL THE SPACE HUMIDITY FALLS BELOW *55% RH, OR FOR A PERIOD OF *30 MINUTES, WHICHEVER IS LONGER. DURING OFF-HOUR OPERATION, THE UNIT RETURN AIR DAMPER SHALL FULL OPEN, AND THE UNIT OUTSIDE AIR DAMPER SHALL FULL CLOSE. ANY ASSOCIATED EXHAUST FANS INTERLOCKED WITH THE AHU'S SHALL NOT BE ENERGIZED. ANY OFF-HOUR INITIATION OF THE DEHUMIDIFICATION CYCLE SHALL ENERGIZE ALL GYMNASIUM AHU'S.

6. CO2 CONTROL: OUTSIDE AIR CFM SHALL BE CONTROLLED BETWEEN MINIMUM OA AND MAXIMUM OA PROPORTIONALLY BETWEEN MINIMUM CO2 AND MAXIMUM CO2. MAXIMUM OA, MINIMUM OA, MAXIMUM CO2, AND MINIMUM CO2 SHALL BE FROM TABLE HEREIN, FOR EACH SPACE. AHU'S SERVING MULTIPLE LISTED SPACES SHALL CONTROL OFF OF SPACE CO2 REQUIRING THE MOST OA.

7. OVERHEAD DOOR SWITCH (WHERE APPLICABLE): ANYTIME OVERHEAD DOOR IS OPEN, AHU SHALL BE DE-ENERGIZED.

8. CEILING/WALL FANS (WHERE APPLICABLE): CEILING FAN LOCAL SWITCH SHALL BE ENABLED (IN SERIES) WHEN THE ASSOCIATED AHU IS ENABLED.

9. RELIEF AIR: THE SPACE STATIC PRESSURE SENSOR SHALL MODULATE RELIEF DAMPERS TO LIMIT APPLICABLE SPACE STATIC PRESSURE TO *0.05".

10. PRE-HEAT CONTROL:
   a) PRE-HEAT VALVE SHALL ENABLE WHENEVER THE MIXED AIR TEMPERATURE IS LESS THAN *48F DEGREES.
   b) SIGNAL CENTRAL PLANT FOR HEATING.
   c) THE PRE-HEAT VALVE SHALL MODULATE AS REQUIRED TO MAINTAIN *50F DEGREE PREHEAT COIL LEAVING AIR TEMPERATURE.

11. AHU FAN AIRFLOW CONTROL: AHU SUPPLY FAN SHALL BE ENERGIZED AT FULL SPEED (SCHEDULED CFM) AND SHALL REMAIN AT FULL SPEED DURING HEATING AND DEHUMIDIFICATION MODES. SINGLE ZONE COOLING AIR HANDLING UNITS WITH FAN MOTORS 1 HP OR LARGER SHALL REDUCE FAN SPEED AS FOLLOWS: ANYTIME DURING COOLING OR ECONOMIZER MODE, FAN SPEED SHALL MODULATE BETWEEN *FULL SPEED (CHILLED WATER VALVE FULL OPEN) AND *66% FAN SPEED (CHILLED WATER VALVE 50% OPEN OR LESS). OUTSIDE AIR DAMPER AND RETURN AIR DAMPER SHALL MODULATE AS REQUIRED TO PROVIDE OUTSIDE AIR CFM SETPOINT PER CO2 CONTROL ABOVE, OVER THE ENTIRE OPERATING RANGE OF THE FAN. COORDINATE VSD, VALVE, AND DAMPER ACTUATOR SPEEDS AS REQUIRED TO PREVENT OVERREACTION AND REDUCE ACTUATOR SPEEDS WHEN APPROACHING SETPOINT(S).

c. AT SHUTDOWN:
   1. FAN SHALL DE-ENERGIZE.
   2. PRE-HEAT AND RE-HEAT HOT WATER VALVES SHALL FULL CLOSE.
   3. CHILLED WATER VALVE SHALL FULL CLOSE.
   4. OUTSIDE AIR DAMPER SHALL FULL CLOSE.
   5. RETURN AIR DAMPER SHALL FULL OPEN.

B.3 FREEZE PROTECTION:

a. ANYTIME THE MIXED AIR TEMPERATURE OR CW COIL LEAVING AIR TEMPERATURE IS BELOW *42F DEGREES:
   1. ENERGIZE THE FAN.
   2. SIGNAL CENTRAL PLANT FOR HEATING.
   3. FULL OPEN THE PRE-HEAT AND RE-HEAT HOT WATER VALVES.
   4. FULL CLOSE THE CHILLED WATER VALVE.
   5. OUTSIDE AIR DAMPER SHALL FULL CLOSE.
   6. RETURN AIR DAMPER SHALL FULL OPEN.

b. AT MIXED AIR OR CW COIL LEAVING AIR TEMP BELOW *38F DEGREES, THE SEQUENCE SHALL BE THE SAME AS FOR BELOW *42F DEGREES SPACE, EXCEPT:
   1. DE-ENERGIZE FAN.
   2. FULL OPEN THE CHILLED WATER VALVE.
   3. TEMPERATURE SHALL ALARM.

C. DOC POINT SCHEDULE:

| | | | | | |
|---|---|---|---|---|---|
| RETURN AIR TEMPERATURE | 1 EACH AI | SPACE RELIEF AIR DAMPER(S) | 1 EACH AO | OUTSIDE AIR DAMPER | 1 EACH AO |
| PRE-HEAT HOT WATER VALVE | 1 EACH AO | OUTSIDE AIR FLOW | 1 EACH AI | MIXED AIR TEMPERATURE | 1 EACH AI |
| FAN START/STOP | 1 EACH DO | CW COIL LEAVING AIR TEMP | 1 EACH AI | FAN SPEED | 1 EACH AO |
| SPACE CO2 | 1 EACH AI | SUPPLY AIR TEMPERATURE | 1 EACH AI | RE-HEAT HOT WATER VALVE | 1 EACH AO |
| CHILLED WATER VALVE | 1 EACH AO | RETURN AIR DAMPER | 1 EACH AO | SPACE HUMIDITY | 1 EACH A |
| FAN CURRENT DETECTOR | 1 EACH DI | SPACE TEMPERATURE | 1 EACH AI | PRE-HEAT AIR TEMPERATURE | 1 EACH AI |
| | | | | SPACE STATIC PRESSURE | 1 EACH AI |

SZ AHU (T1) Sequence
Control Type 1

DWG # 3.4.4

JOB # VWPW

NISD Village at West Pointe West ES

San Antonio, TX

| REV # | DESCRIPTION | DATE |
|---|---|---|
| 1 | Revision 1 | 8/14/2023 |
| 0 | SUBMITTED | 4/28/2023 |

Drawn:
ENG: Dennis Schnellman

Yates Co
4738 Whirlwind Dr.
San Antonio, TX 78217
Phone: 2107023820

# NISD Village at West Pointe West ES
# VWPW

## Typical of AHU-1

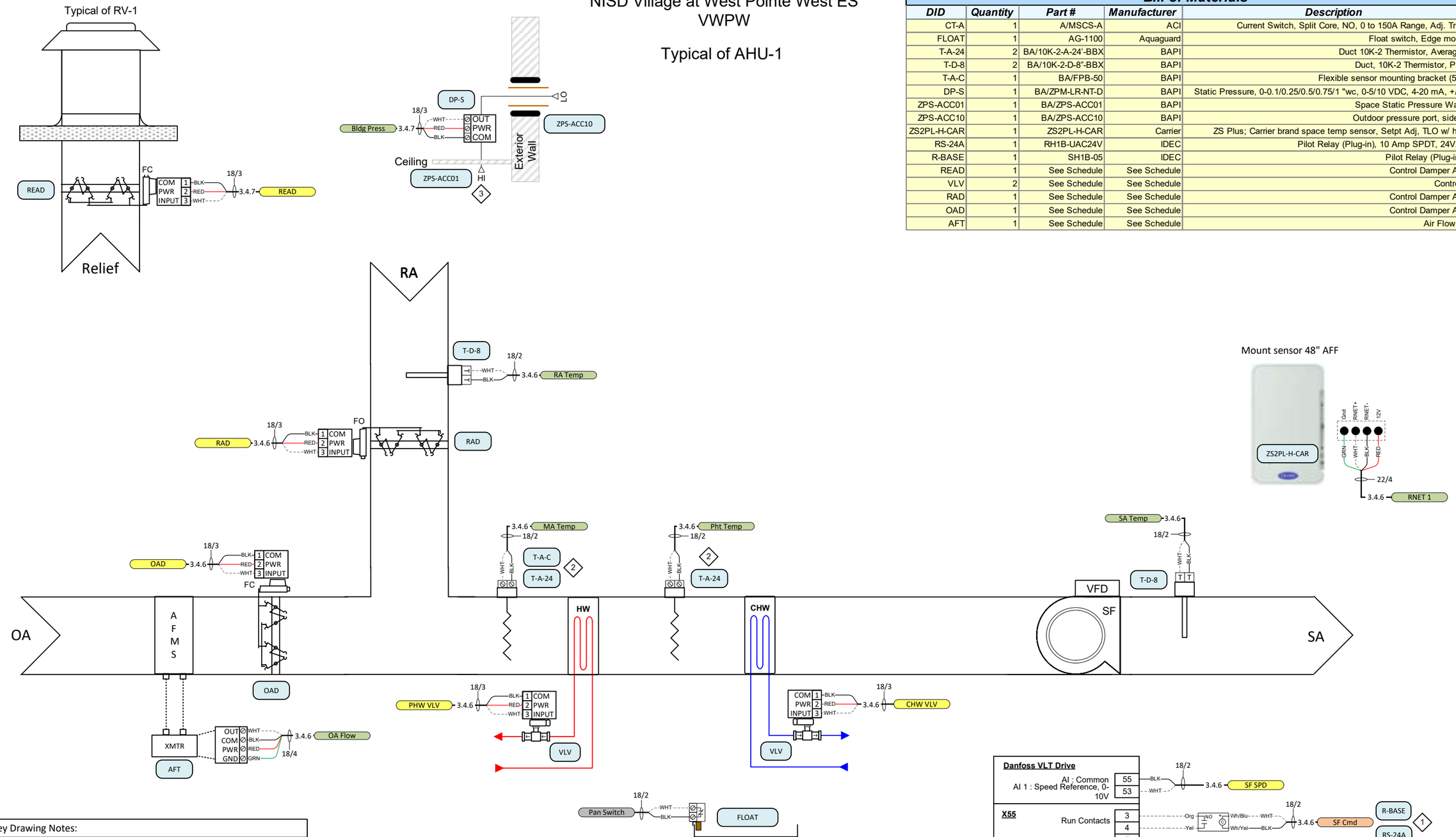


## Bill of Materials

| DID | Quantity | Part # | Manufacturer | Description |
|---|---|---|---|---|
| CT-A | 1 | A/MSCS-A | ACI | Current Switch, Split Core, NO, 0 to 150A Range, Adj. Trip Point |
| FLOAT | 1 | AG-1100 | Aquaguard | Float switch, Edge mount, NC |
| T-A-24 | 2 | BA/10K-2-A-24'-BBX | BAPI | Duct 10K-2 Thermistor, Averaging, 24' |
| T-D-8 | 2 | BA/10K-2-D-8"-BBX | BAPI | Duct, 10K-2 Thermistor, Probe, 8" |
| T-A-C | 1 | BA/FPB-50 | BAPI | Flexible sensor mounting bracket (50 pack) |
| DP-S | 1 | BA/ZPM-LR-NT-D | BAPI | Static Pressure, 0-0.1/0.25/0.5/0.75/1 "wc, 0-5/10 VDC, 4-20 mA, +/-0.25% |
| ZPS-ACC01 | 1 | BA/ZPS-ACC01 | BAPI | Space Static Pressure Wall Plate |
| ZPS-ACC10 | 1 | BA/ZPS-ACC10 | BAPI | Outdoor pressure port, side mount |
| ZS2PL-H-CAR | 1 | ZS2PL-H-CAR | Carrier | ZS Plus; Carrier brand space temp sensor, Setpt Adj, TLO w/ humidity |
| RS-24A | 1 | RH1B-UAC24V | IDEC | Pilot Relay (Plug-in), 10 Amp SPDT, 24VAC Coil |
| R-BASE | 1 | SH1B-05 | IDEC | Pilot Relay (Plug-in) Base |
| READ | 1 | See Schedule | See Schedule | Control Damper Actuator |
| VLV | 2 | See Schedule | See Schedule | Control Valve |
| RAD | 1 | See Schedule | See Schedule | Control Damper Actuator |
| OAD | 1 | See Schedule | See Schedule | Control Damper Actuator |
| AFT | 1 | See Schedule | See Schedule | Air Flow Station |

| Key Drawing Notes: | |
|---|---|
| 1 | Install relay inside control panel – see panel layout this page. Install appropriate wire from relay to field termination. |
| 2 | Install averaging sensor with sensor brackets to avoid kinks in flexible probe |
| 3 | See mechanical drawing floorplans for locations of interior building pressure sensor tap |

General Notes:
1. Refer to Network Diagram and Cable Specification Chart for wiring details and control module address.
2. Coordinate with Electrical Contractor (Div. 26) to provide 120 VAC circuit power to control panels.
3. Refer to Carrier Technical Documentation for specifications on control module setup, wiring, and driver configuration

SZ AHU (T5)
Control Type 5
DWG # 3.4.5
JOB # VWPW

NISD Village at West Pointe West ES
San Antonio, TX

Drawn:
ENG: Dennis Schnellman

| REV # | DESCRIPTION | DATE |
|---|---|---|
| 0 | SUBMITTED | 4/28/2023 |


Yates Co
4738 Whirlwind Dr.
San Antonio, TX 78217
Phone: 2107023820

# NISD Village at West Pointe West ES
# VWPW

## Typical of AHU-1

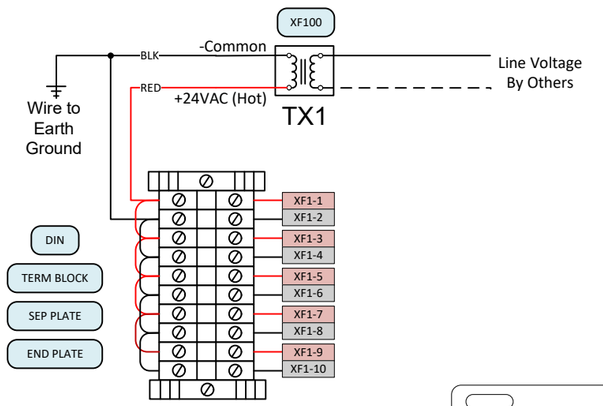


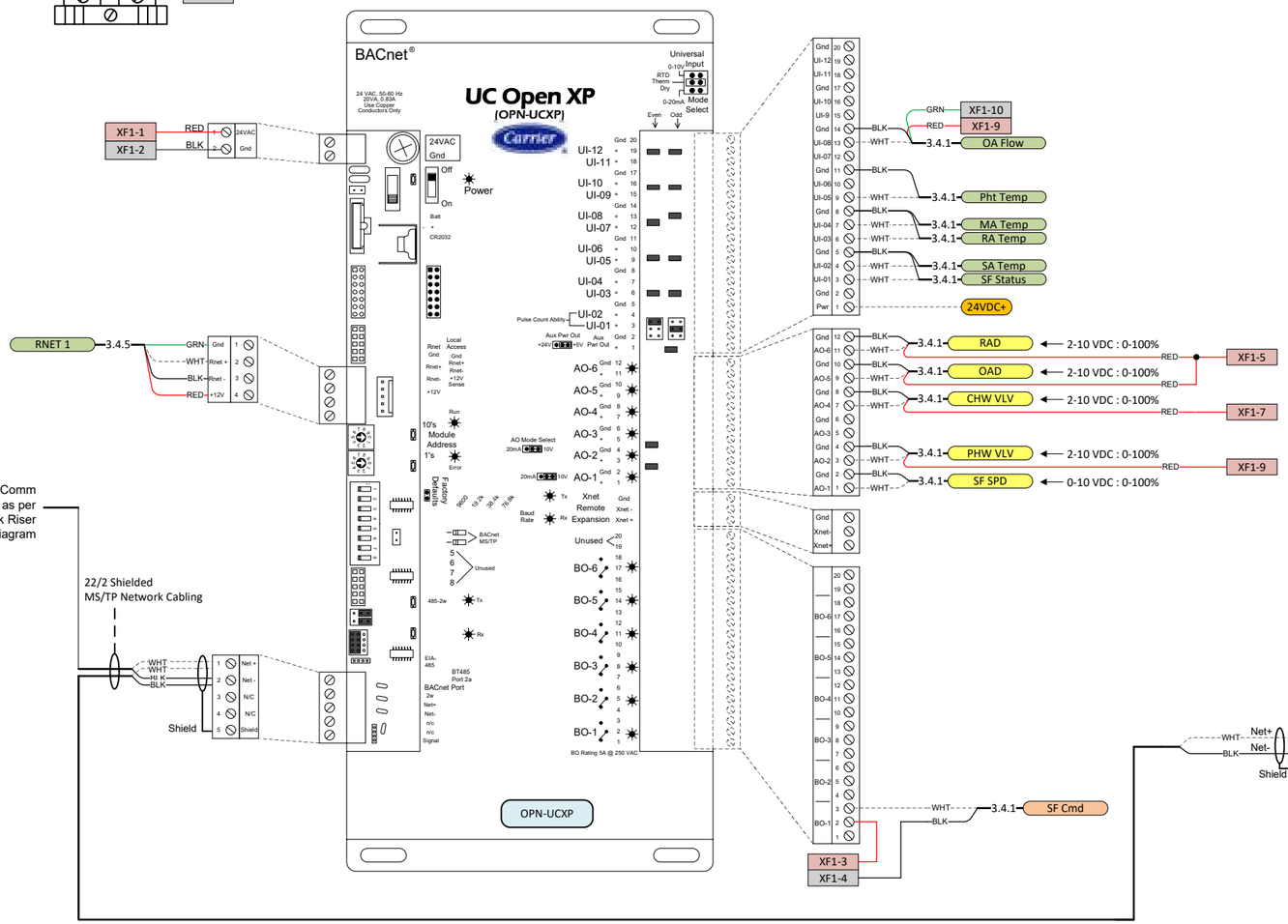


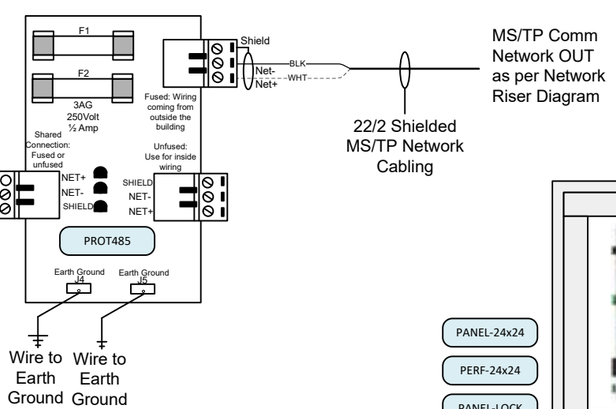


## Bill of Materials

| DID | Quantity | Part # | Manufacturer | Description |
|---|---|---|---|---|
| DIN | 1 | DRMR3 | c3controls | DIN Rail, Slotted, 1 m Length, 35 mm Width x 7.5 mm, Plated Steel |
| WD-1.5 | 1 | WD-B40X80N | c3controls | 1 1/2"W X 3"H Narrow Slot, Wiring Duct & Cover, 1pc, 6ft |
| SEP PLATE | 1 | WTB2-EB | c3controls | Separator Plates (50 pack), 8 mm, Fits 35 mm DIN Rail, Grey Non-metallic |
| END PLATE | 1 | WTB2-EPW2/4 | c3controls | Separator Plates (50 pack), 8 mm, Fits 35 mm DIN Rail, Grey Non-metallic |
| TERM BLOCK | 10 | WTB2-W2 | c3controls | Terminal Block, 5 mm width, DIN-mount |
| OPN-UCXP | 1 | OPN-UCXP | Carrier | UC Open XP (6 BO, 12 UI, 6 AO), Programmable, Multiple Equipment |
| PROT485 | 1 | PROT485 | Carrier | Network Protection Board |
| XF100 | 1 | TR100VA001 | Functional Devices | Control Transformer (120 VAC Input - 24 VAC Output) |
| PERF-24x24 | 1 | A24P24 | Hoffman | Enclosure, Back Plate, 24"x24" |
| PANEL-24x24 | 1 | A24R248HCLO | Hoffman | Enclosure, Wall-mount, Hinged, NEMA3R, 24"x24"x8" |
| PANEL-LOCK | 1 | AL12AR | Hoffman | Enclosure Key Lock Kit |
| SWITCH | 1 | T5225-W | Leviton | Single Pole Switch, Standard Receptacle; Self-grounding |

## Active Points List

| Point Number | Point Type | Point Name | Setup |
|---|---|---|---|
| UI-01 | DI | SF Status | DC |
| UI-02 | AI | Supply Air Temp | Therm |
| UI-03 | AI | Return Air Temp | Therm |
| UI-04 | AI | Mixed Air Temp | Therm |
| UI-05 | AI | Preheat DA Temp | Therm |
| UI-08 | AI | OA Flow | mA |
| AO-1 | AO | Supply Fan Speed | Volts |
| AO-2 | AO | Preheat HW Valve | Volts |
| AO-4 | AO | CHW Valve | Volts |
| AO-5 | AO | Outside Air Damper | Volts |
| AO-6 | AO | Return Air Damper | Volts |
| BO-1 | DO | Supply Fan Cmd | Relay |
| RNET | AI | Zone Temp/Humidity | RNET |

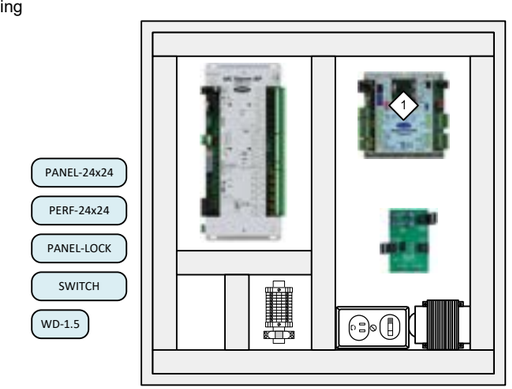


Key Drawing Notes:

1. Relief Ventilation Controller OPN-APP mounted in AH-1 control panel.

General Notes:
1. Refer to Network Diagram and Cable Specification Chart for wiring details and control module address.
2. Coordinate with Electrical Contractor (Div. 26) to provide 120 VAC circuit power to control panels.
3. Refer to Carrier Technical Documentation for specifications on control module setup, wiring, and driver configuration

SZ AHU (T5) Panel Details
Control Type 5

DWG # 3.4.6

JOB # VWPW

NISD Village at West Pointe West ES

San Antonio, TX

| REV # | DESCRIPTION | DATE |
|---|---|---|
| 1 | Revision 1 | 8/14/2023 |
| 0 | SUBMITTED | 4/28/2023 |

Drawn:
ENG: Dennis Schnellman


Yates Co
4738 Whirlwind Dr.
San Antonio, TX 78217
Phone: 2107023820

NISD Village at West Pointe West ES
VWPW

## Bill of Materials

| DID | Quantity | Part # | Manufacturer | Description |
|---|---|---|---|---|
| OPN-APP | 1 | OPN-APP | Carrier | Prog. Controller (5 BO, 6 UI, 3 AO), 2 Equipment |

### Active Points List

| Point Number | Point Type | Point Name | Setup |
|---|---|---|---|
| IN-1 | AI | Bldg Pressure | V |
| AO-1 | AO | Relief Air Damper | V |

Install in panel with AH-1 main controller

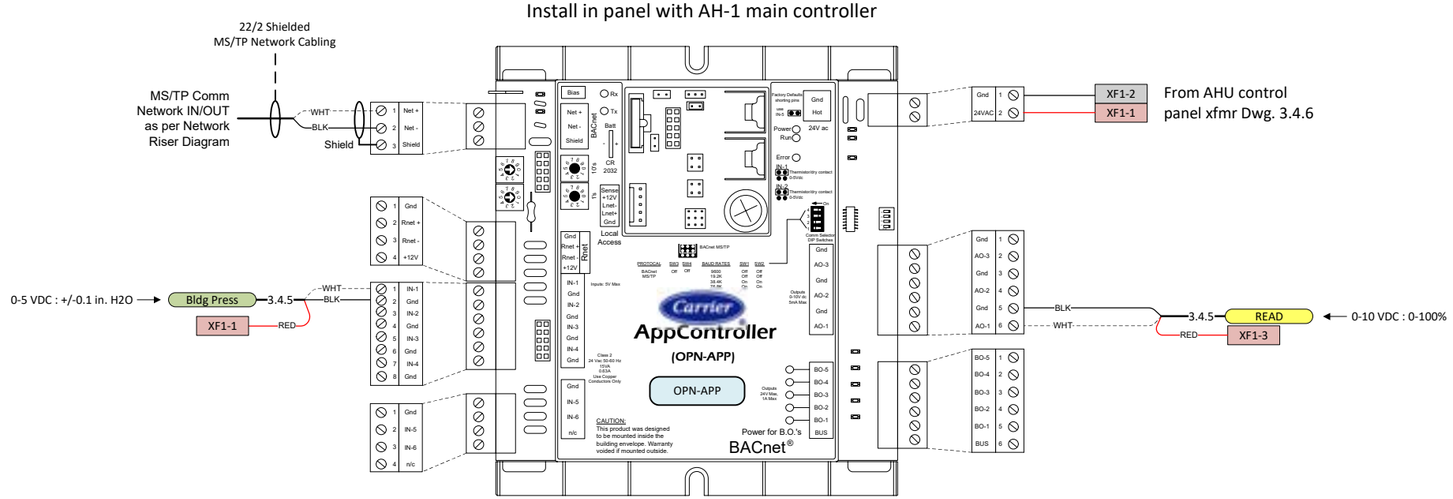


SZ AHU (T5) Relief
Control Type 5

DWG # 3.4.7

JOB # VWPW

NISD Village at West Pointe West ES

San Antonio, TX

Drawn: ENG: Dennis Schnellman

| REV # | DESCRIPTION | DATE |
|---|---|---|
| 0 | SUBMITTED | 4/28/2023 |


Yates Co
4738 Whirlwind Dr.
San Antonio, TX 78217
Phone: 2107023820

Typical of AHU-1

**SEQUENCE - CENTRAL AIR HANDLING UNIT:** SINGLE ZONE AHU WITH OUTSIDE AIR CYCLE AND GRAVITY RELIEF (KITCHEN UNIT)

A. SEE HVAC EQUIPMENT SCHEDULE FOR AIR HANDLING UNITS WITH THIS CONTROL TYPE.

B. OPERATIONAL SEQUENCE:

B.1 OPTIMUM START AND MORNING START-UP:

a. PROVIDE OPTIMUM START, TO AUTOMATICALLY ENERGIZE THE SYSTEM FOR THE MINIMUM PERIOD NECESSARY PRIOR TO OCCUPANCY, AS REQUIRED TO ACHIEVE OCCUPIED ZONE TEMPERATURE SETPOINTS AT THE BEGINNING OF THE OCCUPIED PERIOD. DURING THIS OPERATION THE OCCUPIED MODE SHALL BE ENABLED WITH THE FOLLOWING MODIFICATIONS: THE OUTSIDE AIR DAMPER SHALL REMAIN CLOSED, THE RETURN AIR DAMPER SHALL REMAIN OPEN, AND THE ASSOCIATED EXHAUST FANS SHALL NOT BE ENABLED. THE OPTIMUM START MODE SHALL BE TERMINATED AT THE BEGINNING OF THE SYSTEM OCCUPIED MODE. THE ECONOMIZER SEQUENCE SHALL BE ALLOWED DURING OPTIMUM START WHEN OA CONDITIONS ARE FAVORABLE.

b. IN ADDITION TO THE OPTIMUM START, THE UNIT SHALL SHALL BE PROVIDED WITH A MORNING START-UP OPTION, SUCH THAT *1 HOUR BEFORE A USER DEFINED OCCUPIED START SCHEDULE, THE SYSTEM SHALL BE ENERGIZED, AND SHALL OPERATE SIMILARLY TO THE OPTIMUM START MODE.

c. THE OPTIMUM START AND MORNING START-UP MODES SHALL BE PROVIDED WITH AN ENABLED/DISABLE USER INTERFACE SWITCH ON THE GRAPHIC, TO ALLOW THE USER TO SELECT THE SYSTEM START MODE. OPTIMUM START AND MORNING START-UP SHALL NOT OPERATE SIMULTANEOUSLY.

d. THIS AHU SYSTEM SHALL NOT INITIATE THE CENTRAL COOLING PLANT.

B.2 UNIT OPERATION:

a. AHU SUPPLY FAN SHALL BE ENERGIZED AT FULL SPEED (SCHEDULED CFM).
b. OUTSIDE AIR AND RETURN AIR DAMPERS SHALL MODULATE AS REQUIRED TO MAINTAIN OUTSIDE AIR SETPOINT.

1. IF NO CALL FOR HEATING OR COOLING:
   a) CHILLED WATER VALVE SHALL FULL CLOSE.
   b) HOT WATER VALVE SHALL FULL CLOSE.

2. IF SPACE CALLS FOR HEATING:
   a) CHILLED WATER VALVE SHALL FULL CLOSE.
   b) SIGNAL CENTRAL PLANT FOR HEATING.
   c) MODULATE HOT WATER VALVE AS REQUIRED TO SATISFY THE SPACE.

3. IF SPACE CALLS FOR COOLING, AND OUTSIDE AIR IS NOT FAVORABLE (OA ENTHALPY GREATER THAN RA):
   a) HOT WATER VALVE SHALL FULL CLOSE.
   b) CHILLED WATER VALVE SHALL MODULATE AS REQUIRED TO SATISFY THE SPACE.

4. ECONOMIZER - IF SPACE CALLS FOR COOLING AND OUTSIDE AIR IS FAVORABLE (OA ENTHALPY IS LESS THAN RA ENTHALPY AND OUTSIDE AIR TEMPERATURE IS NOT GREATER THAN *75F DEGREES):
   a) HOT WATER VALVE SHALL FULL CLOSE.
   b) OUTSIDE AIR DAMPER AND RETURN AIR DAMPER SHALL MODULATE AS REQUIRED TO SATISFY THE SPACE.
   c) IF MIXED AIR TEMPERATURE IS ABOVE *55F DEGREES: CHILLED WATER VALVE SHALL MODULATE AS REQUIRED TO SATISFY SPACE.

5. AHU FAN AIRFLOW CONTROL: AHU SUPPLY FAN SHALL BE ENERGIZED AT FULL SPEED (SCHEDULED CFM) AND SHALL REMAIN AT FULL SPEED DURING HEATING MODE. SINGLE ZONE COOLING AIR HANDLING UNITS WITH FAN MOTORS 1 HP OR LARGER SHALL REDUCE FAN SPEED AS FOLLOWS: ANYTIME DURING COOLING OR ECONOMIZER MODE, FAN SPEED SHALL MODULATE BETWEEN *FULL SPEED (CHILLED WATER VALVE FULL OPEN) AND *66% FAN SPEED (CHILLED WATER VALVE 50% OPEN OR LESS). OUTSIDE AIR DAMPER AND RETURN AIR DAMPER SHALL MODULATE AS REQUIRED TO PROVIDE OUTSIDE AIR CFM SETPOINT AS INDICATED IN PARAGRAPH B.2.b.7 AND TABLE BELOW, OVER THE ENTIRE OPERATING RANGE OF THE FAN. COORDINATE VSD, VALVE, AND DAMPER ACTUATOR SPEEDS AS REQUIRED TO PREVENT OVERREACTION AND REDUCE ACTUATOR SPEEDS WHEN APPROACHING SETPOINT(S).

6. RELIEF AIR: THE SPACE STATIC PRESSURE SENSOR SHALL MODULATE RELIEF DAMPERS TO LIMIT APPLICABLE SPACE STATIC PRESSURE TO *0.05".

7. NO DCV CYCLE THIS UNIT. HOWEVER, OUTSIDE AIR CFM SHALL SWITCH BETWEEN SCHEDULED MIN AND MAX SETPOINTS BASED WHETHER THE DISHMACHINE IN THE SCULLERY IS OPERATING. SEE TABULATED DATA BELOW.

8. THE EXAUST FAN FOR THE KITCHEN PROPER (E-1D) SHALL BE ENABLED TO OPERATE WITH THE KITCHEN AHU. AFTER ENABLED, THIS FAN SHALL BE INTERLOCKED TO OPERATE IN RESPONSE TO THE STATUS OF THE KITCHEN HOOD EXHAUST SYSTEM. SEE TABLULATED DATA BELOW FOR FAN OPERATION.

c. AT SHUTDOWN:
   1. AHU FAN SHALL DE-ENERGIZE.
   2. HOT WATER VALVE SHALL FULL CLOSE.
   3. CHILLED WATER VALVE SHALL FULL CLOSE.
   4. OUTSIDE AIR DAMPER SHALL FULL CLOSE.
   5. RETURN AIR DAMPER SHALL FULL OPEN.

B.3 FREEZE PROTECTION:

a. ANYTIME THE MIXED AIR TEMPERATURE OR CW COIL LEAVING AIR TEMPERATURE IS BELOW *42F DEGREES:
   1. ENERGIZE THE AHU FAN.
   2. SIGNAL CENTRAL PLANT FOR HEATING.
   3. FULL OPEN THE HOT WATER VALVE.
   4. FULL CLOSE THE CHILLED WATER VALVE.
   5. OUTSIDE AIR DAMPER SHALL FULL CLOSE.
   6. RETURN AIR DAMPER SHALL FULL OPEN.

b. AT MIXED AIR OR CW COIL LEAVING AIR TEMPERATURE BELOW *38F DEGREES, THE SEQUENCE SHALL BE THE SAME AS FOR BELOW *42F DEGREES SPACE, EXCEPT:
   1. DE-ENERGIZE AHU FAN.
   2. FULL OPEN THE CHILLED WATER VALVE.
   3. TEMPERATURE SHALL ALARM.

C. DDC POINT SCHEDULE:

| | | | | | |
|---|---|---|---|---|---|
| RETURN AIR TEMP | 1 EACH AI | SPACE RELIEF DAMPER | 1 EACH AO | SPACE HUMIDITY | 1 EACH AI |
| OUTSIDE AIR DAMPER | 1 EACH AO | HOT WATER VALVE | 1 EACH AO | SPACE STATIC PRESSURE | 1 EACH AI |
| OUTSIDE AIR FLOW | 1 EACH AI | MIXED AIR TEMPERATURE | 1 EACH AI | SPACE TEMPERATURE | 1 EACH AI |
| AHU FAN START/STOP | 1 EACH DO | HW COIL LEAVING AIR TEMP | 1 EACH AI | AHU FAN CURRENT DETECTOR | 1 EACH DI |
| AHU FAN SPEED | 1 EACH AO | CHILLED WATER VALVE | 1 EACH AO | | |
| RETURN AIR DAMPER | 1 EACH AO | SUPPLY AIR TEMPERATURE | 1 EACH AI | | |

* ITEMS ARE TO BE FIELD ADJUSTABLE

SZ AHU (T5) Sequence
Control Type 5

JOB # VWPW
DWG # 3.4.8

NISD Village at West Pointe West ES
San Antonio, TX

| REV # | DESCRIPTION | DATE |
|---|---|---|
| 1 | Revision 1 | 8/14/2023 |
| 0 | SUBMITTED | 4/28/2023 |

Drawn:
ENG: Dennis Schnellman

Yates Co
4738 Whirlwind Dr.
San Antonio, TX 78217
Phone: 2107023820

# NISD Village at West Pointe West ES
# VWPW

| Bill of Materials | | | | |
|---|---|---|---|---|
| DID | Quantity | Part # | Manufacturer | Description |
| OPN-UC | 2 | OPN-UC | Carrier | Prog. Controller (5 BO, 6 UI), 5 Equipment |

## Mount controllers in AH-13 Enclosure

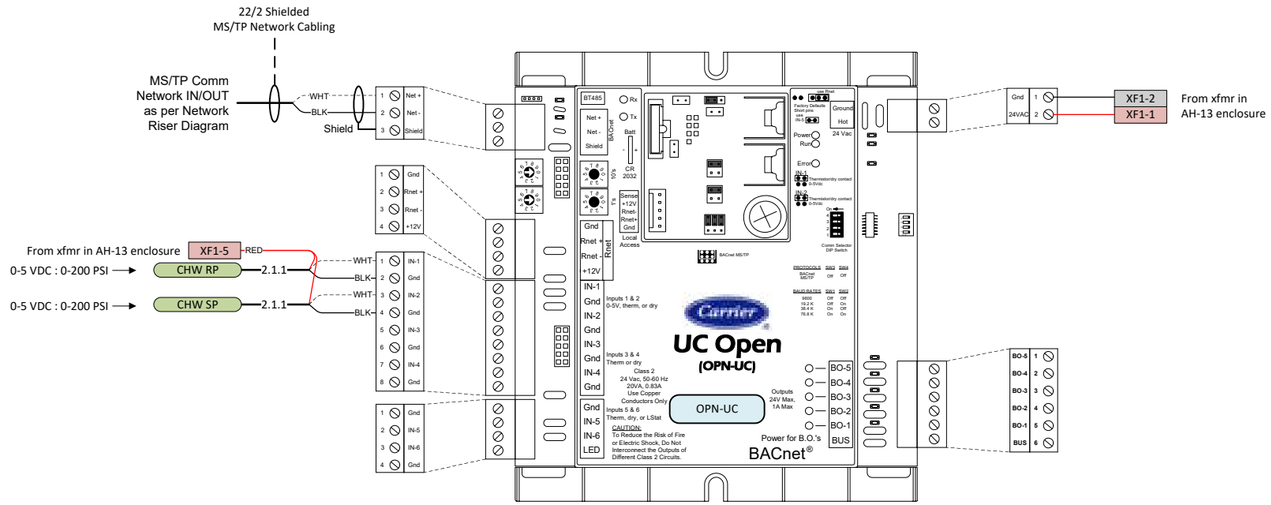


| Active Points List | | | |
|---|---|---|---|
| Point Number | Point Type | Point Name | Setup |
| IN-1 | AI | CHW Return Pressure | V |
| IN-2 | AI | CHW Supply Pressure | V |

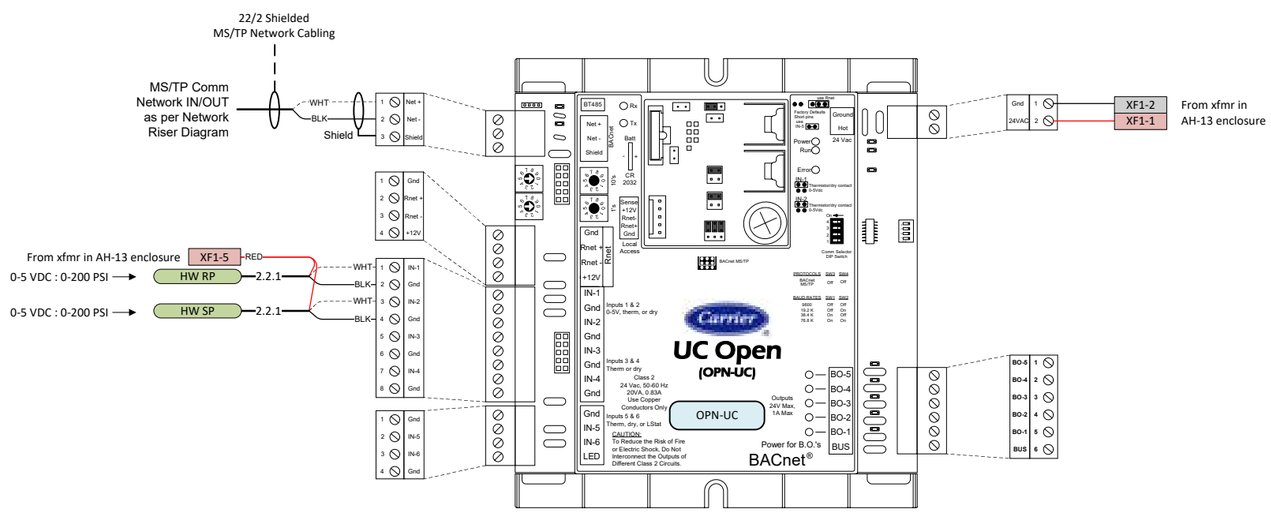


| Active Points List | | | |
|---|---|---|---|
| Point Number | Point Type | Point Name | Setup |
| IN-1 | AI | HW Return Pressure | V |
| IN-2 | AI | HW Supply Pressure | V |

CHWS & HWS Pressure

DWG # 3.5

JOB # VWPW

NISD Village at West Pointe West ES

San Antonio, TX

Drawn: ENG: Dennis Schnellman

| REV # | DESCRIPTION | DATE |
|---|---|---|
| 0 | SUBMITTED | 4/28/2023 |


Yates Co
4738 Whirlwind Dr.
San Antonio, TX 78217
Phone: 2107023820

NISD Village at West Pointe West ES
VWPW

Typical of RT-2,3,4

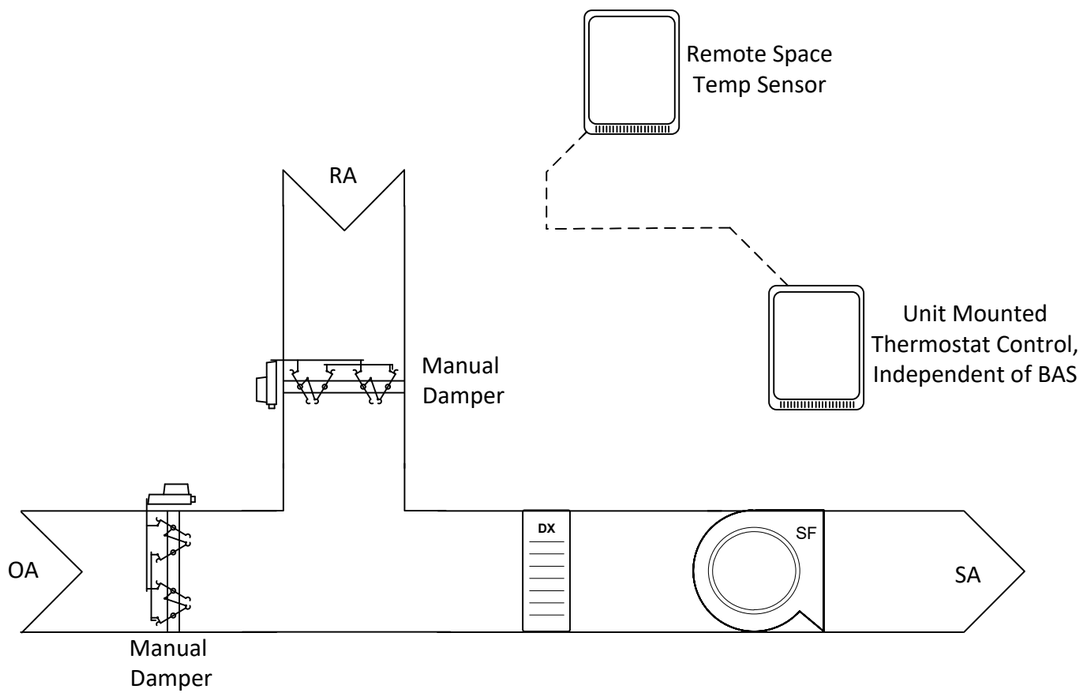


Mount sensor 48" AFF

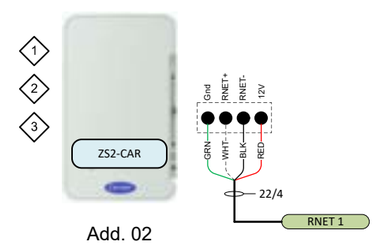


Add. 02

## Bill of Materials

| DID | Quantity | Part # | Manufacturer | Description |
|---|---|---|---|---|
| ZS2-CAR | 3 | ZS2-CAR | Carrier | ZS Standard; Carrier brand space temp sensor |

## Active Points List

| Point Number | Point Type | Point Name | Setup |
|---|---|---|---|
| RNET | AI | Zone Temp | RNET |

**MDF/IDF Rooftop Unit – Typical of RT-2,3,4**

**SEQUENCE - MDF/IDF ROOFTOP UNIT:**

A. SEE HVAC EQUIPMENT SCHEDULE FOR ROOFTOP UNITS WITH THIS CONTROL TYPE.

B. OPERATIONAL SEQUENCE:

B.1 UNIT OPERATION:

a. UNIT SHALL BE ENABLED CONTINUOUSLY, TOTALLY INDEPENDENT OF THE EMS CONTROL OR SCHEDULING.
b. UNIT SHALL BE CONTROLLED BY A WIRED REMOTE TEMPERATURE SENSOR IN THE SPACE WITH THE ADJUSTABLE CONTROLLER MOUNTED IN THE ROOFTOP UNIT.
c. ROOM SHALL HAVE A TEMPERATURE SENSOR ON THE EMS SYSTEM FOR MONITORING AND ALARM ONLY. SPACE SETPOINT SHALL BE SET AT *70F DEGREES, AND SHALL ALARM AT TEMPERTURES ABOVE *80F DEGREES.
d. SUPPLY FAN SHALL CYCLE ON/OFF WITH THE UNIT COMPRESSOR. UNIT SHALL BE PROGRAMMED WITH A *15 MINUTE CYCLE TIME DELAY.
e. HEATING WILL NOT BE REQUIRED AT ANY HEAT PUMP TYPE UNITS.

C. DDC POINT SCHEDULE: SPACE TEMPERATURE 1 EACH AI

* ITEMS ARE TO BE FIELD ADJUSTABLE.

| Key Drawing Notes: | |
|---|---|
| 1 | RT-2: Daisy chain with AH-2 sensor on the other side of the wall. |
| 2 | RT-3: Daisy chain with AH-5 sensor. |
| 3 | RT-4: Connect IDF C102 to AH-9 & IDF C202 to AH-14 |

General Notes:
1. Refer to Network Diagram and Cable Specification Chart for wiring details and control module address.
2. Coordinate with Electrical Contractor (Div. 26) to provide 120 VAC circuit power to control panels.
3. Refer to Carrier Technical Documentation for specifications on control module setup, wiring, and driver configuration

MDF/IDF RTU (T7)
Control Type 7
DWG # 3.6.1
JOB # VWPW

NISD Village at West Pointe West ES
San Antonio, TX

Drawn:
ENG: Dennis Schnellman

| REV # | DESCRIPTION | DATE |
|---|---|---|
| 1 | Revision 1 | 8/14/2023 |
| 0 | SUBMITTED | 4/28/2023 |


Yates Co
4738 Whirlwind Dr.
San Antonio, TX 78217
Phone: 2107023820

# NISD Village at West Pointe West ES
# VWPW

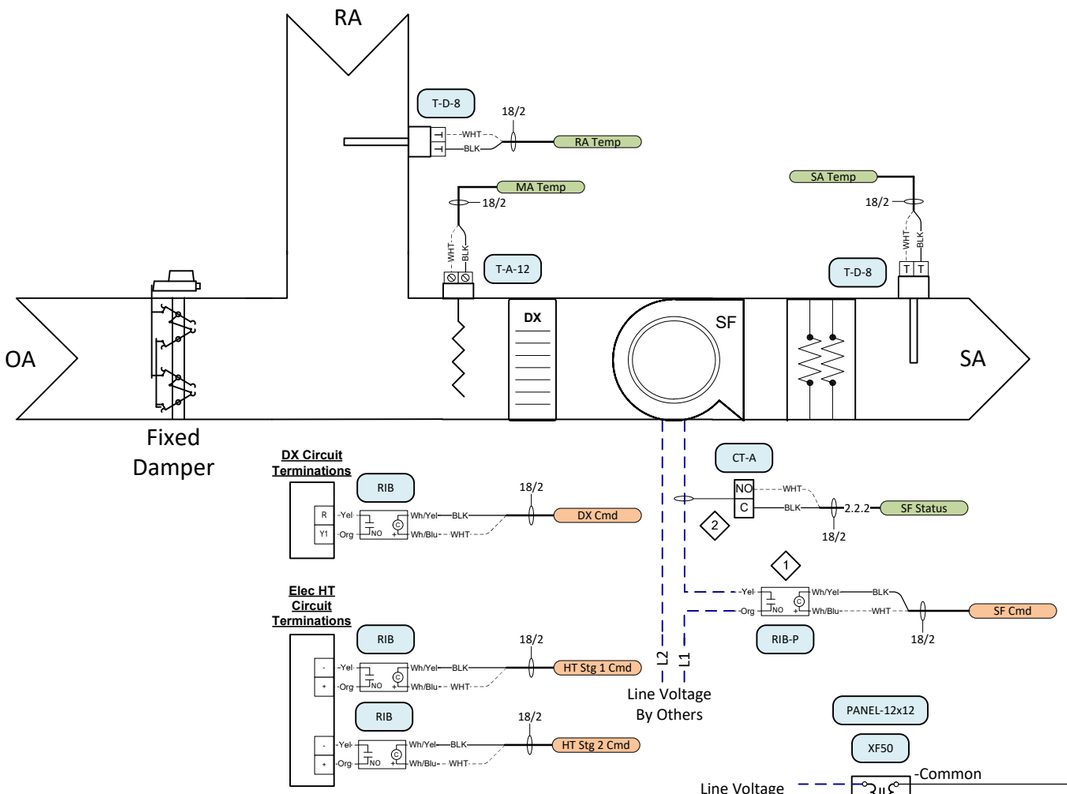


## Bill of Materials

| DID | Quantity | Part # | Manufacturer | Description |
|---|---|---|---|---|
| CT-A | 1 | A/MSCS-A | ACI | Current Switch, Split Core, NO, 0 to 150A Range, Adj. Trip Point |
| T-A-12 | 1 | BA/10K-2-A-12'-BBX | BAPI | Duct 10K-2 Thermistor, Averaging, 12' |
| T-D-8 | 2 | BA/10K-2-D-8"-BBX | BAPI | Duct, 10K-2 Thermistor, Probe, 8" |
| OPN-UC | 1 | OPN-UC | Carrier | Prog. Controller (5 BO, 6 UI), 5 Equipment |
| ZS2PL-CAR | 1 | ZS2PL-CAR | Carrier | ZS Plus; Carrier brand space temp sensor, Setpt Adj., TLO |
| RIB-P | 1 | RIB2401B | Functional Devices | Enclosed Relay 20 Amp SPDT, 10-30 VAC/VDC or 120 VAC Coil |
| RIB | 3 | RIBU1C | Functional Devices | Enclosed Relay 10 Amp SPDT, 10-30 VAC/VDC or 120 VAC Coil |
| XF50 | 1 | TR50VA015 | Functional Devices | Control Transformer (120/208/240/277/480 VAC Input - 24 VAC Output |
| PANEL-12x12 | 1 | AHE12X12X4 | Hoffman | Enclosure, Wall-mount, Hinged, Steel, NEMA1, 12"x12"x4" |

## Active Points List

| Point Number | Point Type | Point Name | Setup |
|---|---|---|---|
| IN-1 | DI | SF Status | DC |
| IN-2 | AI | SA Temp | Therm |
| IN-3 | AI | MA Temp | Therm |
| IN-4 | AI | RA Temp | Therm |
| BO-1 | DO | SF Cmd | Relay |
| BO-2 | DO | DX Cmd | Relay |
| BO-3 | DO | HT Stg 1 Cmd | Relay |
| BO-4 | DO | HT Stg 2 Cmd | Relay |
| RNET | AI | Zone Temp | RNET |

| Key Drawing Notes: | |
|---|---|
| 1 | Install relay near control panel. |
| 2 | Install current switch around incoming power leg |

General Notes:
1. Refer to Network Diagram and Cable Specification Chart for wiring details and control module address.
2. Coordinate with Electrical Contractor (Div. 26) to provide 120 VAC circuit power to control panels.
3. Refer to Carrier Technical Documentation for specifications on control module setup, wiring, and driver configuration

DX RTU with Elec Heat (T8)
Control Type 8
DWG # 3.6.2
JOB # VWPW

NISD Village at West Pointe West ES
San Antonio, TX

Drawn:
ENG: Dennis Schnellman

| REV # | DESCRIPTION | DATE |
|---|---|---|
| 0 | SUBMITTED | 4/28/2023 |


Yates Co
4738 Whirlwind Dr.
San Antonio, TX 78217
Phone: 2107023820

## Typical of RT-1

**SEQUENCE - SMALL (5 TON & BELOW) PACKAGED DX ROOFTOP UNITS:** SINGLE ZONE UNIT WITHOUT OUTSIDE AIR CYCLE, AND WITH ELECTRIC HEAT

A. SEE HVAC EQUIPMENT SCHEDULE FOR ROOFTOP UNITS WITH THIS CONTROL TYPE.

A1. OPERATIONAL CONDITIONS: UNIT SHALL OPERATE ON A USER DEFINABLE SCHEDULE:

a. OCCUPIED MODE: *75F DEGREES COOLING SETPOINT.
*70F DEGREES HEATING SETPOINT.

b. UNOCCUPIED MODE: *95F DEGREES COOLING SETPOINT.
*55F DEGREES HEATING SETPOINT.

B. OPERATIONAL SEQUENCE:

B.1 OPTIMUM START AND MORNING START-UP:

a. PROVIDE OPTIMUM START, TO AUTOMATICALLY ENERGIZE THE SYSTEM FOR THE MINIMUM PERIOD NECESSARY PRIOR TO OCCUPANCY, AS REQUIRED TO ACHIEVE OCCUPIED ZONE TEMPERATURE SETPOINTS AT THE BEGINNING OF THE OCCUPIED PERIOD. DURING THIS OPERATION THE OCCUPIED MODE SHALL BE ENABLED WITH THE FOLLOWING MODIFICATIONS: THE ASSOCIATED EXHAUST FANS SHALL NOT BE ENABLED. THE OPTIMUM START MODE SHALL BE TERMINATED AT THE BEGINNING OF THE SYSTEM OCCUPIED MODE.

b. IN ADDITION TO THE OPTIMUM START, THE UNIT SHALL SHALL BE PROVIDED WITH A MORNING START-UP OPTION, SUCH THAT *1 HOUR BEFORE A USER DEFINED OCCUPIED START SCHEDULE, THE SYSTEM SHALL BE ENERGIZED, AND SHALL OPERATE SIMILARLY TO THE OPTIMUM START MODE.

c. THE OPTIMUM START AND MORNING START-UP MODES SHALL BE PROVIDED WITH AN ENABLED/DISABLE USER INTERFACE SWITCH ON THE GRAPHIC, TO ALLOW THE USER TO SELECT THE SYSTEM START MODE. OPTIMUM START AND MORNING START-UP SHALL NOT OPERATE SIMULTANEOUSLY.

B.2 AT START-UP:

a. IF NO CALL FOR HEATING OR COOLING:
1. COMPRESSOR SHALL DE-ENERGIZE.
2. HEATER SHALL DE-ENERGIZE.
3. FAN SHALL DE-ENERGIZE.

b. IF SPACE CALLS FOR HEATING:
1. COMPRESSOR SHALL DE-ENERGIZE ON NON HEAT PUMP UNITS. COMPRESSOR HEATING (STAGE 1) SHALL MODULATE ON HEAT PUMP UNITS AS REQUIRED TO SATISFY SPACE.
2. HEATER SHALL CYCLE (STAGE 1 - NON HEAT PUMP, STAGES 2 & 3 - HEAT PUMPS) AS REQUIRED TO SATISFY THE SPACE.
3. FAN SHALL CYCLE WITH HEATER.

c. IF SPACE CALLS FOR COOLING:
1. COMPRESSOR SHALL CYCLE AS REQUIRED TO SATISFY THE SPACE.
2. HEATER SHALL DE-ENERGIZE.
3. FAN SHALL CYCLE WITH COMPRESSOR.

d. AT SHUTDOWN:
1. FAN SHALL DE-ENERGIZE.
2. HEAT (ALL STAGES) SHALL DE-ENERGIZE.
3. COMPRESSORS SHALL DE-ENERGIZE.

B.3 FREEZE PROTECTION: ANYTIME:

a. SPACE TEMPERATURE BELOW *42F DEGREES:
1. FAN SHALL ENERGIZE.
2. HEAT (STAGES 1 AND 2) SHALL ENERGIZE.

b. SPACE OR SUPPLY AIR TEMPERATURE BELOW *38F DEGREES:
1. FAN SHALL DE-ENERGIZE.
2. HEAT SHALL DE-ENERGIZE.
3. TEMPERATURE SHALL ALARM.

C. DDC POINT SCHEDULE:

| | | | |
|---|---|---|---|
| SPACE TEMP | 1 EACH AI | SUPPLY AIR TEMP | 1 EACH AI |
| MIXED AIR TEMP | 1 EACH AI | RETURN AIR TEMP | 1 EACH AI |
| FAN START/STOP | 1 EACH DO | FAN CURRENT DETECTOR | 1 EACH DI |
| HEATER START/STOP | 1 EACH DO (PER STAGE) | | |
| COMPR START/STOP | 1 EACH DO (PER STAGE) | | |

* ITEMS ARE TO BE FIELD ADJUSTABLE.

DX RTU with Elec HT Sequence
Control Type 8

DWG # 3.6.3

JOB # VWPW

NISD Village at West Pointe West ES

San Antonio, TX

| REV # | DESCRIPTION | DATE |
|---|---|---|
| 1 | Revision 1 | 8/14/2023 |
| 0 | SUBMITTED | 4/28/2023 |

Drawn:
ENG: Dennis Schnellman

Yates Co
4738 Whirlwind Dr.
San Antonio, TX 78217
Phone: 2107023820

NISD Village at West Pointe West ES
VWPW

## Air Terminal Unit Schedule

| Type | Unit Name | Area Served | Served by | Min CFM | Cooling CFM | Heating CFM | Box Size (in.) | Zone Temp | Zone CO2 | Zone Sensor Model | Zone Sensor Qty | 3-Way Valve |
|---|---|---|---|---|---|---|---|---|---|---|---|---|
| 9 | F-3A | Music B109 | AH-3 | 350 | 1375-1525 | 1375-1525 | 14 | x | | ZS2PL-CAR | 1 | |
| 9 | F-3B | Music Storage B109A / T/R B108 | AH-3 | 125 | 700-900 | 700-900 | 10 | x | x | ZS2PL-CAR, CWE2 | 1 | x |
| 9 | F-3C | T/R B103A&B / Corridor XB101 / Storage B103D/E/F | AH-3 | 125 | 1550-1800 | 1550-1800 | 16 | x | | BA/10K-2-SP-631 | 1 | |
| 9 | F-7A | ISS A108 / Testing Stor. A109 / T/R A112 | AH-7 | 50 | 250-500 | 250-500 | 8 | x | | ZS2PL-CAR | 1 | |
| 9 | F-7B | Admin Stor. A105A / Admin Workroom A105 | AH-7 | 50 | 250-500 | 250-500 | 8 | x | | ZS2PL-CAR | 1 | |
| 9 | F-7C | Office A110 / T/R A111 / Attend A103 / Hall XA103 | AH-7 | 125 | 525-675 | 525-675 | 8 | x | | ZS2PL-CAR | 2 | |
| 9 | F-7D | Conference A107 | AH-7 | 100 | 525-675 | 525-675 | 8 | x | x | ZS2PL-CAR, CWE2 | 1 | |
| 9 | F-7E | Principal A106 | AH-7 | 75 | 250-500 | 250-500 | 8 | x | | ZS2PL-CAR | 1 | |
| 9 | F-7F | Associate Principal A104 | AH-7 | 75 | 250-500 | 250-500 | 8 | x | | ZS2PL-CAR | 1 | |
| 9 | F-7G | Sec. Lobby XA101 / Corridor XA102 / Lobby XA106 | AH-7 | 50 | 1375-1525 | 1375-1525 | 14 | x | | BA/10K-2-SP-631 | 1 | |
| 9 | F-7H | Secretarial A101A | AH-7 | 100 | 700-900 | 700-900 | 10 | x | x | ZS2PL-CAR, CWE2 | 1 | |
| 9 | F-7J | Nurse's Clinic A102 / T/R A102A | AH-7 | 75 | 250-500 | 250-500 | 8 | x | | ZS2PL-CAR | 1 | |
| 9 | F-8A | Teacher Resource A119 / Hall XA109 & XA111 | AH-8 | 150 | 1150-1350 | 1150-1350 | 14 | x | x | ZS2PL-CAR, CWE2 | 1 | |
| 9 | F-8B | Teacher Lounge A120 / Hall XA110 | AH-8 | 125 | 1150-1350 | 1150-1350 | 14 | x | x | ZS2PL-CAR, CWE2 | 1 | x |
| 9 | F-8C | Teacher Workroom A121 | AH-8 | 100 | 700-900 | 700-900 | 10 | x | | ZS2PL-CAR | 1 | |
| 9 | F-8D | Counselor A118 / Calming Room A117A | AH-8 | 100 | 250-500 | 250-500 | 8 | x | | ZS2PL-CAR | 1 | |
| 9 | F-8E | Counselor A117 | AH-8 | 100 | 525-675 | 525-675 | 8 | x | | ZS2PL-CAR | 1 | |
| 9 | F-9A | Art A113 / Art Stor A113A | AH-9 | 425 | 1550-1800 | 1550-1800 | 16 | x | x | ZS2PL-CAR, CWE2 | 1 | x |
| 9 | F-9B | ECSE A123 | AH-9 | 425 | 1150-1350 | 1150-1350 | 14 | x | | ZS2PL-CAR | 1 | |
| 9 | F-9C | Pre-K A124 / Vest A123B / T/R A123BA&B | AH-9 | 425 | 1375-1525 | 1375-1525 | 14 | x | | ZS2PL-CAR | 1 | |
| 9 | F-9D | Kinder A127 / Vest A127 | AH-9 | 425 | 1150-1350 | 1150-1350 | 14 | x | x | ZS2PL-CAR, CWE2 | 1 | x |
| 9 | F-9E | Corridor XA107 / T/R A116 | AH-9 | 125 | 525-675 | 525-675 | 8 | x | | BA/10K-2-SP-631 | 1 | |
| 9 | F-9F | Stem Lab A125 | AH-9 | 125 | 1375-1525 | 1375-1525 | 14 | x | x | ZS2PL-CAR, CWE2 | 1 | |
| 9 | F-9G | Spec Instr A126 | AH-9 | 425 | 1150-1350 | 1150-1350 | 14 | x | | ZS2PL-CAR | 1 | |
| 9 | F-9H | 2nd Grade E107 | AH-9 | 425 | 925-1125 | 925-1125 | 12 | x | | ZS2PL-CAR | 1 | x |
| 9 | F-9J | 2nd Grade E109 | AH-9 | 425 | 925-1125 | 925-1125 | 12 | x | x | ZS2PL-CAR, CWE2 | 1 | |
| 9 | F-9K | 2nd Grade E111 | AH-9 | 425 | 925-1125 | 925-1125 | 12 | x | | ZS2PL-CAR | 1 | |
| 9 | F-10A | Specialized Instr. C105 | AH-10 | 350 | 925-1125 | 925-1125 | 12 | x | x | ZS2PL-CAR, CWE2 | 1 | x |
| 9 | F-10B | ALE C107 | AH-10 | 350 | 1150-1350 | 1150-1350 | 14 | x | | ZS2PL-CAR | 1 | |
| 9 | F-10C | ALE Closet C105A&7A / Kitch. C107B / T/R C107C | AH-10 | 125 | 250-500 | 250-500 | 8 | x | | ZS2PL-CAR | 1 | |
| 9 | F-10D | BMC C109 | AH-10 | 350 | 925-1125 | 925-1125 | 12 | x | | ZS2PL-CAR | 1 | |
| 9 | F-10E | Gifted & Talented C111 | AH-10 | 350 | 925-1125 | 925-1125 | 12 | x | x | ZS2PL-CAR, CWE2 | 1 | |
| 9 | F-10F | Kinder C106 | AH-10 | 350 | 925-1125 | 925-1125 | 12 | x | | ZS2PL-CAR | 1 | |
| 9 | F-10G | Kinder C108 | AH-10 | 350 | 1150-1350 | 1150-1350 | 14 | x | | ZS2PL-CAR | 1 | |
| 9 | F-10H | Kinder C110 | AH-10 | 350 | 925-1125 | 925-1125 | 12 | x | x | ZS2PL-CAR, CWE2 | 1 | |
| 9 | F-10J | Kinder C112 | AH-10 | 350 | 1150-1350 | 1150-1350 | 14 | x | | ZS2PL-CAR | 1 | |
| 9 | F-10K | Corridor XC101 / T/R C103 / Boys C113 / Girls C114 | AH-10 | 350 | 1375-1525 | 1375-1525 | 14 | x | | BA/10K-2-SP-631 | 1 | |
| 9 | F-10L | Kinder C115 | AH-10 | 350 | 925-1125 | 925-1125 | 12 | x | | ZS2PL-CAR | 1 | |

Terminal Unit Schedule pg.1
DWG # 5.0.1
JOB # VWPW
NISD Village at West Pointe West ES
San Antonio, TX
Drawn:
ENG: Dennis Schnellman
4/28/2023 SUBMITTED
DATE DESCRIPTION
0
REV #

Yates Co
4738 Whirlwind Dr.
San Antonio, TX 78217
Phone: 2107023820

NISD Village at West Pointe West ES
VWPW

## Air Terminal Unit Schedule

| Type | Unit Name | Area Served | Served by | Min CFM | Cooling CFM | Heating CFM | Box Size (in.) | Zone Temp | Zone CO2 | Zone Sensor Model | Zone Sensor Qty | 3-Way Valve |
|---|---|---|---|---|---|---|---|---|---|---|---|---|
| 9 | F-11A | ESL D102 / Speech D101 | AH-11 | 210 | 525-675 | 525-675 | 8 | x | | ZS2PL-CAR (x2) | 2 | |
| 9 | F-11B | 1st Grade D106 | AH-11 | 350 | 925-1125 | 925-1125 | 12 | x | | ZS2PL-CAR | 1 | |
| 9 | F-11C | 1st Grade D108 | AH-11 | 350 | 925-1125 | 925-1125 | 12 | x | x | ZS2PL-CAR, CWE2 | 1 | |
| 9 | F-11D | 1st Grade D110 | AH-11 | 350 | 925-1125 | 925-1125 | 12 | x | | ZS2PL-CAR | 1 | |
| 9 | F-11E | Corridor XD101 / Boys D103 / Girls D104 | AH-11 | 350 | 1150-1350 | 1150-1350 | 14 | x | | BA/10K-2-SP-631 | 1 | |
| 9 | F-11F | 1st Grade D109 | AH-11 | 350 | 925-1125 | 925-1125 | 12 | x | | ZS2PL-CAR | 1 | |
| 9 | F-11G | 1st Grade D107 | AH-11 | 350 | 925-1125 | 925-1125 | 12 | x | x | ZS2PL-CAR, CWE2 | 1 | |
| 9 | F-11H | 1st Grade D105 | AH-11 | 350 | 925-1125 | 925-1125 | 12 | x | | ZS2PL-CAR | 1 | |
| 9 | F-11J | 2nd Grade E108 | AH-11 | 350 | 925-1125 | 925-1125 | 12 | x | | ZS2PL-CAR | 1 | |
| 9 | F-11K | 2nd Grade E110 | AH-11 | 350 | 925-1125 | 925-1125 | 12 | x | x | ZS2PL-CAR, CWE2 | 1 | |
| 9 | F-11L | 2nd Grade E112 | AH-11 | 350 | 925-1125 | 925-1125 | 12 | x | | ZS2PL-CAR | 1 | |
| 9 | F-11M | Corridor XE101 & XE102 | AH-11 | 350 | 1375-1525 | 1375-1525 | 14 | x | | BA/10K-2-SP-631 | 1 | |
| 9 | F-12A | Small Class C207 / C208 | AH-12 | 375 | 925-1125 | 925-1125 | 12 | x | | ZS2PL-CAR | 1 | |
| 9 | F-12B | 3rd Grade C210 | AH-12 | 375 | 925-1125 | 925-1125 | 12 | x | x | ZS2PL-CAR, CWE2 | 1 | |
| 9 | F-12C | 3rd Grade C211 | AH-12 | 375 | 925-1125 | 925-1125 | 12 | x | | ZS2PL-CAR | 1 | x |
| 9 | F-12D | Small Class C213 | AH-12 | 375 | 925-1125 | 925-1125 | 12 | x | | ZS2PL-CAR | 1 | |
| 9 | F-12E | 3rd Grade C214 | AH-12 | 375 | 925-1125 | 925-1125 | 12 | x | x | ZS2PL-CAR, CWE2 | 1 | |
| 9 | F-12F | 3rd Grade C216 | AH-12 | 375 | 925-1125 | 925-1125 | 12 | x | | ZS2PL-CAR | 1 | |
| 9 | F-12G | Boys C218 / Girls C219 / Stairwell | AH-12 | 210 | 1375-1525 | 1375-1525 | 14 | x | | BA/10K-2-SP-631 | 1 | |
| 9 | F-12H | Corridor XC201 / T/R C205 / Stor. C203 | AH-12 | 200 | 925-1125 | 925-1125 | 12 | x | | BA/10K-2-SP-631 | 1 | |
| 9 | F-12J | 3rd Grade C215 | AH-12 | 375 | 925-1125 | 925-1125 | 12 | x | | ZS2PL-CAR | 1 | |
| 9 | F-12K | 3rd Grade C217 | AH-12 | 375 | 925-1125 | 925-1125 | 12 | x | | ZS2PL-CAR | 1 | |
| 9 | F-12L | Large Class C220 | AH-12 | 400 | 1150-1350 | 1150-1350 | 14 | x | | ZS2PL-CAR | 1 | |
| 9 | F-13A | 4th Grade D208 | AH-13 | 375 | 925-1125 | 925-1125 | 12 | x | | ZS2PL-CAR | 1 | |
| 9 | F-13B | 4th Grade D209 | AH-13 | 375 | 1150-1350 | 1150-1350 | 14 | x | | ZS2PL-CAR | 1 | |
| 9 | F-13C | 4th Grade D207 | AH-13 | 375 | 925-1125 | 925-1125 | 12 | x | x | ZS2PL-CAR, CWE2 | 1 | |
| 9 | F-13D | 4th Grade D206 | AH-13 | 375 | 925-1125 | 925-1125 | 12 | x | x | ZS2PL-CAR, CWE2 | 1 | |
| 9 | F-13E | 4th Grade D204 | AH-13 | 375 | 925-1125 | 925-1125 | 12 | x | | ZS2PL-CAR | 1 | |
| 9 | F-13F | 4th Grade D205 | AH-13 | 375 | 1150-1350 | 1150-1350 | 14 | x | | ZS2PL-CAR | 1 | |
| 9 | F-13G | Corridor XD201 / Boys D202 / Girls D203 | AH-13 | 185 | 1150-1350 | 1150-1350 | 14 | x | | BA/10K-2-SP-631 | 1 | |
| 9 | F-13H | Corridor XD201 / Stairwell | AH-13 | 200 | 1150-1350 | 1150-1350 | 14 | x | | BA/10K-2-SP-631 | 1 | |
| 9 | F-14A | 5th Grade E208 | AH-14 | 400 | 925-1125 | 925-1125 | 12 | x | | ZS2PL-CAR | 1 | |
| 9 | F-14B | 5th Grade E207 | AH-14 | 400 | 925-1125 | 925-1125 | 12 | x | | ZS2PL-CAR | 1 | x |
| 9 | F-14C | 5th Grade E210 | AH-14 | 400 | 925-1125 | 925-1125 | 12 | x | x | ZS2PL-CAR, CWE2 | 1 | |
| 9 | F-14D | 5th Grade E209 | AH-14 | 400 | 925-1125 | 925-1125 | 12 | x | | BA/10K-2-SP-631 | 1 | |
| 9 | F-14E | 5th Grade E212 | AH-14 | 400 | 925-1125 | 925-1125 | 12 | x | | ZS2PL-CAR | 1 | |
| 9 | F-14F | 5th Grade E211 | AH-14 | 400 | 925-1125 | 925-1125 | 12 | x | | ZS2PL-CAR | 1 | |
| 9 | F-14G | Corridor XE202 / Stairwell | AH-14 | 235 | 1550-1800 | 1550-1800 | 16 | x | | BA/10K-2-SP-631 | 1 | |
| 12 | V-1 | Kitchen Office B106B | AH-1 | 50 | 250 | N/A | 10 | x | | ZS2PL-CAR | 1 | |
| 12 | V-3 | Elec B102 | AH-3 | 0 | 200 | N/A | 10 | x | | ZS2PL-CAR | 1 | |
| 12 | V-5 | Gym Office B103C | AH-5 | 100 | 350 | N/A | 12 | x | | ZS2PL-CAR | 1 | |
| 12 | V-6 | Library Office A115A | AH-6 | 50 | 350 | N/A | 12 | x | | ZS2PL-CAR | 1 | |
| 12 | V-8 | Elec A122 | AH-8 | 0 | 200 | N/A | 10 | x | | ZS2PL-CAR | 1 | |
| 12 | V-11 | Elec E106 | AH-11 | 0 | 400 | N/A | 12 | x | | ZS2PL-CAR | 1 | |
| 12 | V-14 | Elec E205 | AH-14 | 0 | 200 | N/A | 10 | x | | ZS2PL-CAR | 1 | |

Terminal Unit Schedule pg.2
DWG # 5.0.2
JOB # VWPW
NISD Village at West Pointe West ES
San Antonio, TX

| REV # | DESCRIPTION | DATE |
|---|---|---|
| 0 | SUBMITTED | 4/28/2023 |

Drawn:
ENG: Dennis Schnellman

Yates Co
4738 Whirlwind Dr.
San Antonio, TX 78217
Phone: 2107023820

# NISD Village at West Pointe West ES
# VWPW

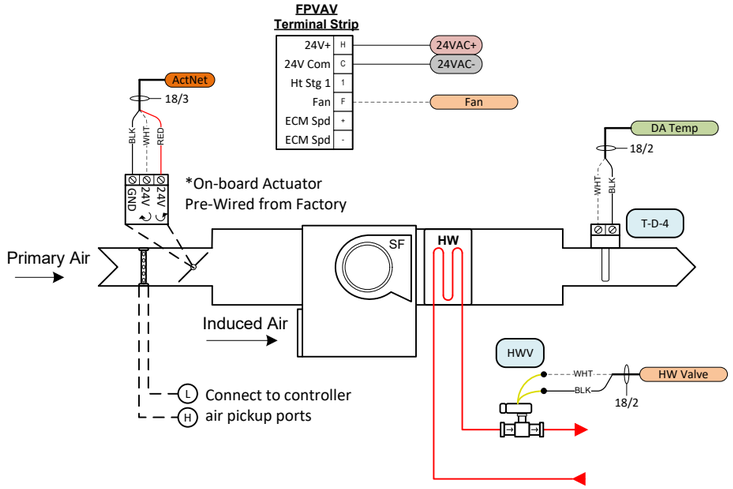


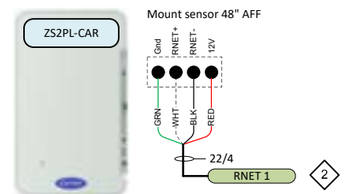


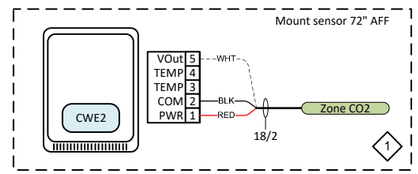


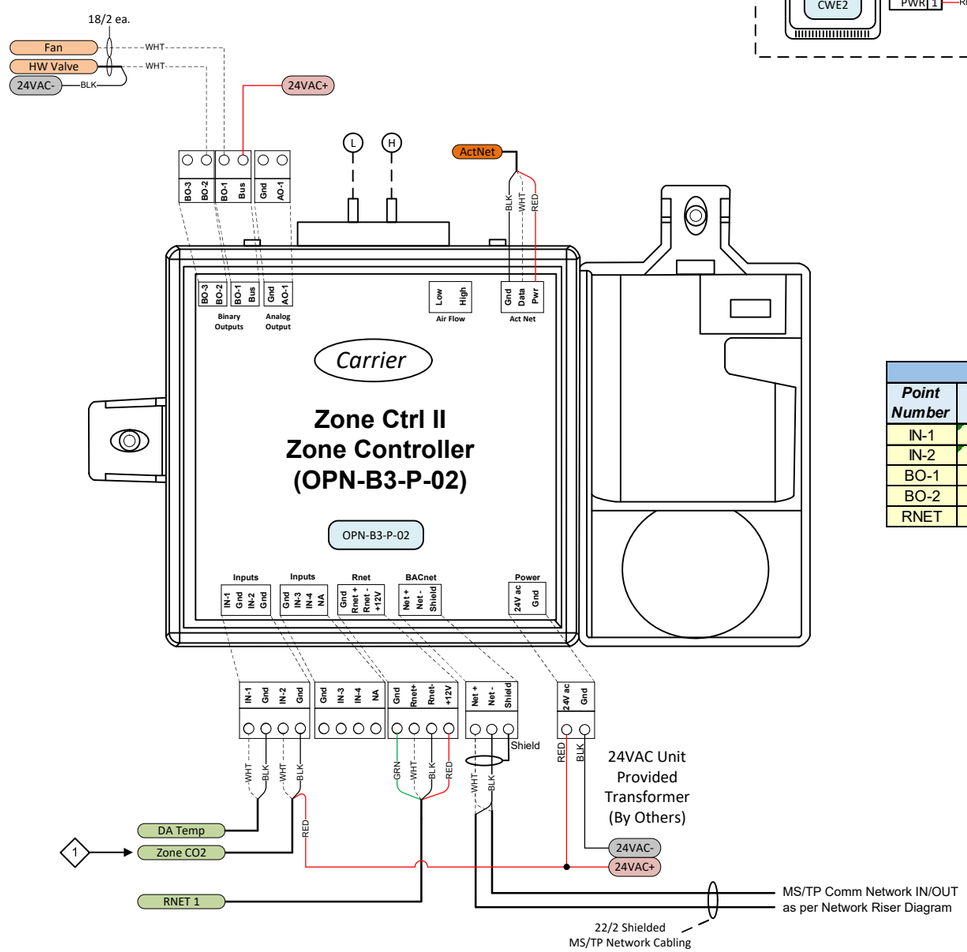


| Active Points List | | | |
|---|---|---|---|
| Point Number | Point Type | Point Name | Setup |
| IN-1 | AI | Discharge Air Temp | Therm |
| IN-2 | AI | Zone CO2 Level | V |
| BO-1 | DO | Fan | Relay |
| BO-2 | DO | HW Valve | Relay |
| RNET | AI | Zone Temp | RNET |

## Bill of Materials

| DID | Quantity | Part # | Manufacturer | Description |
|---|---|---|---|---|
| T-D-4 | 56 | BA/10K-2-D-4"-BBX | BAPI | Duct, 10K-2 Thermistor, Probe, 4" |
| OPN-B3-P-02 | 56 | OPN-B3-P-02 | Carrier | Programmable Zone II controller with Air Flow, Actuator, AO and 3 BO (45 in-lb) |
| ZS2PL-CAR | 58 | ZS2PL-CAR | Carrier | ZS Plus; Carrier brand space temp sensor, Setpt Adj, TLO |
| HWV | 56 | See Schedule | See Schedule | Control Valve |
| CWE2 | 15 | CWE2 | Veris | Wall CO2 Sensor, 0-5/10 VDC, 4-20 mA, 0-2000 ppm |

**SEQUENCE - FAN POWERED BOXES:**

A. PROVIDE FOR EACH FAN POWERED BOX ON PROJECT. FAN POWERED BOX CONTROLLER SHALL BE PROVIDED FOR FACTORY INSTALLATION BY BOX MANUFACTURER. PROVIDE 3-WAY CONTROL VALVE AT END-OF-LOOP UNITS, AND AS INDICATED ON THE DRAWINGS.

B. OPERATIONAL SEQUENCE:

B.1 OPERATIONAL CONDITIONS: THE UNIT SHALL OPERATE ON A USER DEFINED SCHEDULE:

a. OCCUPIED MODE: *75F DEGREES COOLING SETPOINT
*70F DEGREES HEATING SETPOINT

b. UNOCCUPIED MODE: *95F DEGREES COOLING SETPOINT
*55F DEGREES HEATING SETPOINT

c. A MINIMUM OF 75% OF ZONE SPACES ABOVE COOLING SETPOINT OR BELOW HEATING SETPOINT SHALL BE REQUIRED TO ENABLE ALL BOXES SERVED BY ASSOCIATED AIR HANDLING UNIT.

B.2 UNIT OPERATION:

a. FAN SHALL ENERGIZE ALONG WITH ALL BOXES SERVED BY ASSOCIATED AIR HANDLING UNIT:

1. IF SPACE CALLS FOR NO HEATING OR COOLING:
   a) HOT WATER VALVE SHALL FULL CLOSE.
   b) DAMPER SHALL MAINTAIN MINIMUM POSITION TO THE AIR HANDLING UNIT.

2. IF SPACE CALLS FOR HEATING:
   a) SIGNAL CENTRAL PLANT FOR HEATING THRU ASSOCIATED AIR HANDLING UNIT.
   b) TWO-POSITION HOT WATER VALVE SHALL CYCLE AS REQUIRED TO SATISFY SPACE.
   c) DAMPER SHALL MAINTAIN MINIMUM POSITION TO THE AIR HANDLING UNIT.

3. IF SPACE CALLS FOR COOLING:
   a) HOT WATER VALVE SHALL FULL CLOSE.
   b) SUPPLY DAMPER SHALL MODULATE AS REQUIRED TO SATISFY THE SPACE. SEE NOTE (1) BELOW.

B.3 FREEZE PROTECTION: ANYTIME:

a. SPACE OR SUPPLY AIR TEMPERATURE FALL BELOW *45F DEGREES:
   1. FAN SHALL ENERGIZE.
   2. HOT WATER VALVE SHALL FULL OPEN.

b. SPACE OR SUPPLY AIR TEMPERATURE FALL BELOW *36F DEGREES:
   1. FAN SHALL DE-ENERGIZE
   2. HOT WATER VALVE SHALL FULL OPEN.
   3. TEMPERATURE SHALL ALARM.

B.4 SCIENCE AREA FAN POWEREED BOXES: WHERE APPLICABLE, FAN POWERED BOXES IN THE SCIENCE LABS SHALL BE INTERLOCKED WITH THE PURGE FAN IN THEIR RESPECTIVE LAB. WHEN A PURGE FAN IS ENERGIZED (THRU LOCAL TWIST TIMER) THE PRIMARY DAMPER ON THE CORRESPONDING FAN POWERED BOX(ES) SHALL OPEN TO COMPENSATE FOR THE EXHAUST AIR. SIMILARLY, THE PRIMARY DAMPER SHALL BE DRIVEN OPEN ON LAB OR PREP ROOM BOXES WHEN THE APPLICABLE FUME HOOD EXHAUST FAN IS ENERGIZED.

C. DDC POINT SCHEDULE:

| | | | |
|---|---|---|---|
| SPACE TEMPERATURE | 1 EACH AI | VELOCITY SENSOR | 1 EACH AI |
| HOT WATER VALVE | 1 EACH DO | FAN START/STOP | 1 EACH DO |
| DAMPER | 1 EACH AO (1) | DISCHARGE AIR TEMP | 1 EACH AI |

NOTE (1): MAY BE ACCOMPLISHED WITH ONE ANALOG OUTPUT OR 2 DIGITAL OUTPUTS WITH FLOATING MOTOR WITH MINIMUM 110 SECOND STROKE TIME AND LIMIT SWITCHES.

* ITEMS ARE TO BE FIELD ADJUSTABLE.

Typical of 56
(See terminal unit schedule for specific units)

| Key Drawing Notes: | |
|---|---|
| 1 | Zone CO2 option provided for specific units only. Refer to terminal unit schedule on drawing 5.0.1 & 5.0.2 |
| 2 | FPB F-11A & F-7C each require two space temperature sensors to be averaged between the two zones. Refer to M-1.4 for zone sensors locations. |

FPVAV (T9-1)
Control Type 9

DWG # 5.1

JOB # VWPW

NISD Village at West Pointe West ES

San Antonio, TX

Drawn:
ENG: Dennis Schnellman

| REV # | DESCRIPTION | DATE |
|---|---|---|
| 0 | SUBMITTED | 4/28/2023 |


Yates Co
4738 Whirlwind Dr.
San Antonio, TX 78217
Phone: 2107023820

# NISD Village at West Pointe West ES
# VWPW

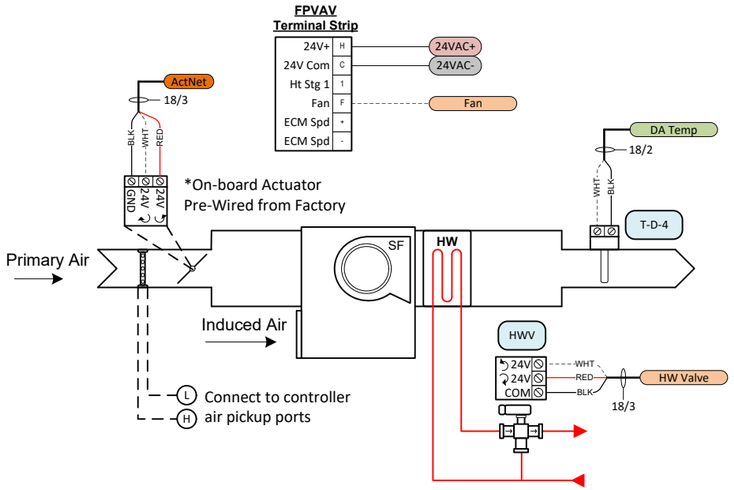


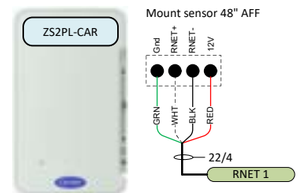


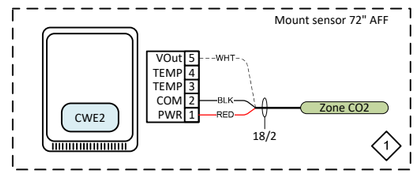


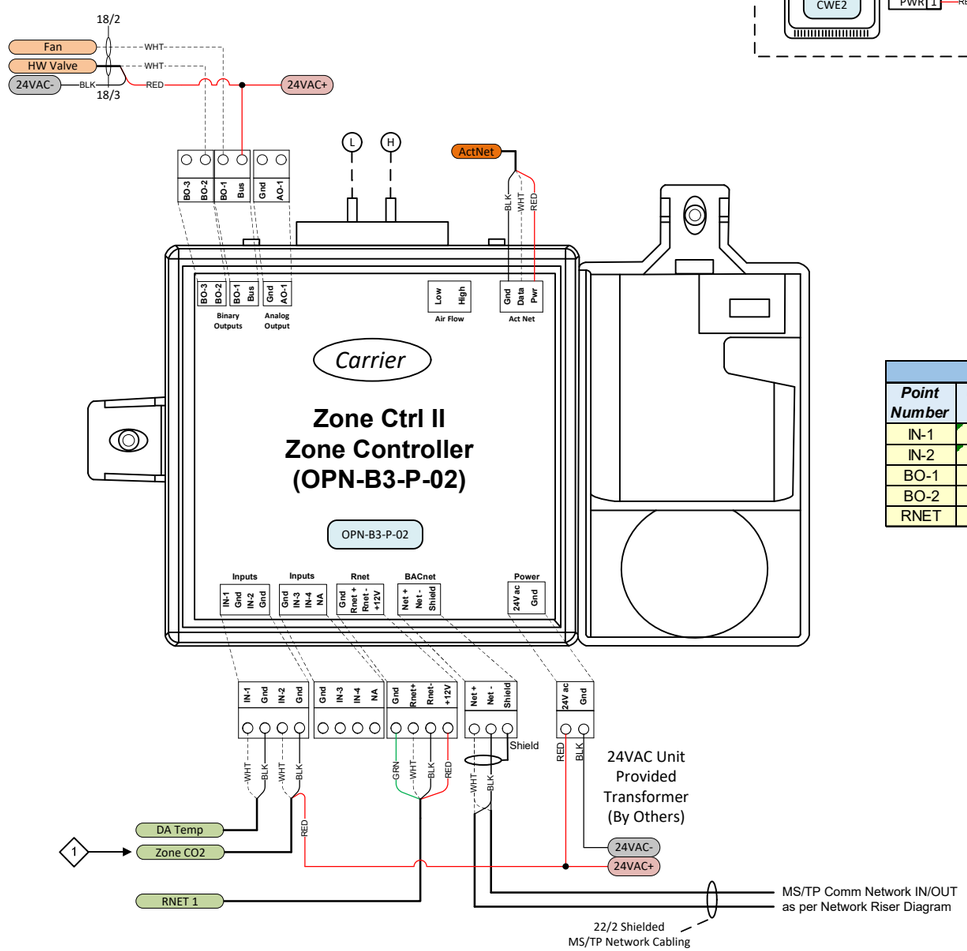


| Active Points List | | | |
|---|---|---|---|
| Point Number | Point Type | Point Name | Setup |
| IN-1 | AI | Discharge Air Temp | Therm |
| IN-2 | AI | Zone CO2 Level | V |
| BO-1 | DO | Fan | Relay |
| BO-2 | DO | HW Valve | Relay |
| RNET | AI | Zone Temp | RNET |

| Bill of Materials | | | | |
|---|---|---|---|---|
| DID | Quantity | Part # | Manufacturer | Description |
| T-D-4 | 8 | BA/10K-2-D-4"-BBX | BAPI | Duct, 10K-2 Thermistor, Probe, 4" |
| OPN-B3-P-02 | 8 | OPN-B3-P-02 | Carrier | Programmable Zone II controller with Air Flow, Actuator, AO and 3 BO (45 in-lb) |
| ZS2PL-CAR | 8 | ZS2PL-CAR | Carrier | ZS Plus; Carrier brand space temp sensor, Setpt Adj, TLO |
| HWV | 8 | See Schedule | See Schedule | Control Valve |
| CWE2 | 5 | CWE2 | Veris | Wall CO2 Sensor, 0-5/10 VDC, 4-20 mA, 0-2000 ppm |

**SEQUENCE - FAN POWERED BOXES:**

A. PROVIDE FOR EACH FAN POWERED BOX ON PROJECT. FAN POWERED BOX CONTROLLER SHALL BE PROVIDED FOR FACTORY INSTALLATION BY BOX MANUFACTURER. PROVIDE 3-WAY CONTROL VALVE AT END-OF-LOOP UNITS, AND AS INDICATED ON THE DRAWINGS.

B. OPERATIONAL SEQUENCE:

B.1 OPERATIONAL CONDITIONS: THE UNIT SHALL OPERATE ON A USER DEFINED SCHEDULE:

a. OCCUPIED MODE: *75F DEGREES COOLING SETPOINT
*70F DEGREES HEATING SETPOINT

b. UNOCCUPIED MODE: *95F DEGREES COOLING SETPOINT
*55F DEGREES HEATING SETPOINT

c. A MINIMUM OF 75% OF ZONE SPACES ABOVE COOLING SETPOINT OR BELOW HEATING SETPOINT SHALL BE REQUIRED TO ENABLE ALL BOXES SERVED BY ASSOCIATED AIR HANDLING UNIT.

B.2 UNIT OPERATION:

a. FAN SHALL ENERGIZE ALONG WITH ALL BOXES SERVED BY ASSOCIATED AIR HANDLING UNIT:

1. IF SPACE CALLS FOR NO HEATING OR COOLING:
   a) HOT WATER VALVE SHALL FULL CLOSE.
   b) DAMPER SHALL MAINTAIN MINIMUM POSITION TO THE AIR HANDLING UNIT.

2. IF SPACE CALLS FOR HEATING:
   a) SIGNAL CENTRAL PLANT FOR HEATING THRU ASSOCIATED AIR HANDLING UNIT.
   b) TWO-POSITION HOT WATER VALVE SHALL CYCLE AS REQUIRED TO SATISFY SPACE.
   c) DAMPER SHALL MAINTAIN MINIMUM POSITION TO THE AIR HANDLING UNIT.

3. IF SPACE CALLS FOR COOLING:
   a) HOT WATER VALVE SHALL FULL CLOSE.
   b) SUPPLY DAMPER SHALL MODULATE AS REQUIRED TO SATISFY THE SPACE. SEE NOTE (1) BELOW.

B.3 FREEZE PROTECTION: ANYTIME:

a. SPACE OR SUPPLY AIR TEMPERATURE FALL BELOW *45F DEGREES:
   1. FAN SHALL ENERGIZE.
   2. HOT WATER VALVE SHALL FULL OPEN.

b. SPACE OR SUPPLY AIR TEMPERATURE FALL BELOW *36F DEGREES:
   1. FAN SHALL DE-ENERGIZE
   2. HOT WATER VALVE SHALL FULL OPEN.
   3. TEMPERATURE SHALL ALARM.

B.4 SCIENCE AREA FAN POWEREED BOXES: WHERE APPLICABLE, FAN POWERED BOXES IN THE SCIENCE LABS SHALL BE INTERLOCKED WITH THE PURGE FAN IN THEIR RESPECTIVE LAB. WHEN A PURGE FAN IS ENERGIZED (THRU LOCAL TWIST TIMER) THE PRIMARY DAMPER ON THE CORRESPONDING FAN POWERED BOX(ES) SHALL OPEN TO COMPENSATE FOR THE EXHAUST AIR. SIMILARLY, THE PRIMARY DAMPER SHALL BE DRIVEN OPEN ON LAB OR PREP ROOM BOXES WHEN THE APPLICABLE FUME HOOD EXHAUST FAN IS ENERGIZED.

C. DDC POINT SCHEDULE:

| | | | |
|---|---|---|---|
| SPACE TEMPERATURE | 1 EACH AI | VELOCITY SENSOR | 1 EACH AI |
| HOT WATER VALVE | 1 EACH DO | FAN START/STOP | 1 EACH DO |
| DAMPER | 1 EACH AO (1) | DISCHARGE AIR TEMP | 1 EACH AI |

NOTE (1): MAY BE ACCOMPLISHED WITH ONE ANALOG OUTPUT OR 2 DIGITAL OUTPUTS WITH FLOATING MOTOR WITH MINIMUM 110 SECOND STROKE TIME AND LIMIT SWITCHES.

* ITEMS ARE TO BE FIELD ADJUSTABLE.

Typical of 8
(See terminal unit schedule for specific units)

| Key Drawing Notes: | |
|---|---|
| 1 | Zone CO2 option provided for specific units only. Refer to terminal unit schedule on drawing 5.0.1 & 5.0.2. |

FPVAV (T9-2)
Control Type 9

DWG # 5.2

JOB # VWPW

NISD Village at West Pointe West ES

San Antonio, TX

| REV # | DESCRIPTION | DATE |
|---|---|---|
| 1 | Revision 1 | 8/14/2023 |
| 0 | SUBMITTED | 4/28/2023 |

Drawn:
ENG: Dennis Schnellman


Yates Co
4738 Whirlwind Dr.
San Antonio, TX 78217
Phone: 2107023820

# NISD Village at West Pointe West ES
# VWPW

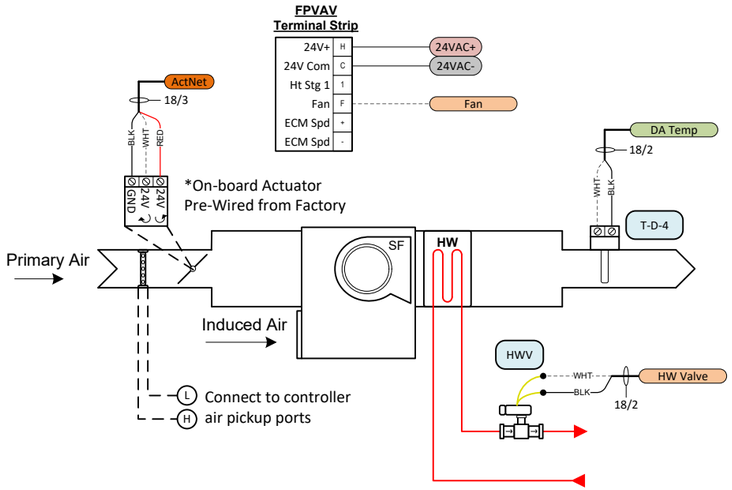


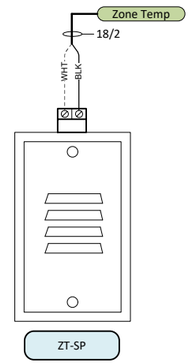


Mount sensor 48" AFF

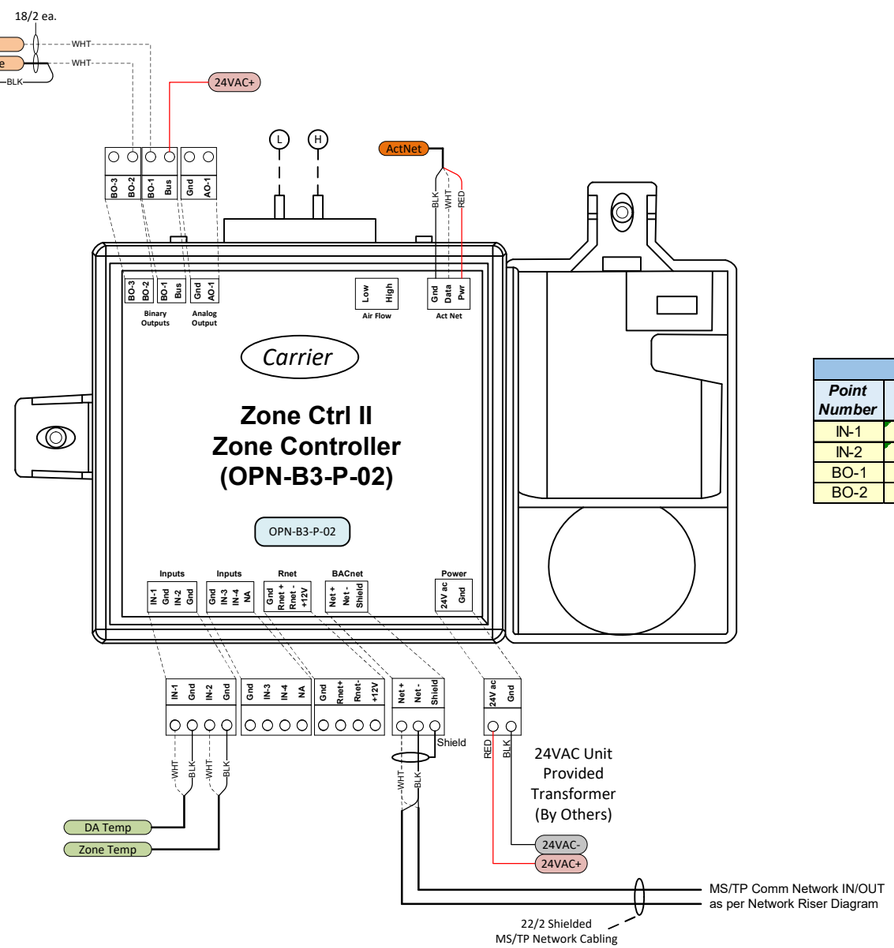


| Active Points List | | | |
|---|---|---|---|
| Point Number | Point Type | Point Name | Setup |
| IN-1 | AI | Discharge Air Temp | Therm |
| IN-2 | AI | Zone Temp | Therm |
| BO-1 | DO | Fan | Relay |
| BO-2 | DO | HW Valve | Relay |

Typical of 12
(See terminal unit schedule for specific units)

| Bill of Materials | | | | |
|---|---|---|---|---|
| DID | Quantity | Part # | Manufacturer | Description |
| T-D-4 | 12 | BA/10K-2-D-4"-BBX | BAPI | Duct, 10K-2 Thermistor, Probe, 4" |
| ZT-SP | 12 | BA/10K-2-SP-631 | BAPI | Wall Temp Sensor, Stainless Steel, Louvered |
| OPN-B3-P-02 | 12 | OPN-B3-P-02 | Carrier | Programmable Zone II controller with Air Flow, Actuator, AO and 3 BO (45 in-lb) |
| HWV | 12 | See Schedule | See Schedule | Control Valve |

**SEQUENCE - FAN POWERED BOXES:**

A. PROVIDE FOR EACH FAN POWERED BOX ON PROJECT. FAN POWERED BOX CONTROLLER SHALL BE PROVIDED FOR FACTORY INSTALLATION BY BOX MANUFACTURER. PROVIDE 3-WAY CONTROL VALVE AT END-OF-LOOP UNITS, AND AS INDICATED ON THE DRAWINGS.

B. OPERATIONAL SEQUENCE:

B.1 OPERATIONAL CONDITIONS: THE UNIT SHALL OPERATE ON A USER DEFINED SCHEDULE:

a. OCCUPIED MODE: *75F DEGREES COOLING SETPOINT
*70F DEGREES HEATING SETPOINT

b. UNOCCUPIED MODE: *95F DEGREES COOLING SETPOINT
*55F DEGREES HEATING SETPOINT

c. A MINIMUM OF 75% OF ZONE SPACES ABOVE COOLING SETPOINT OR BELOW HEATING SETPOINT SHALL BE REQUIRED TO ENABLE ALL BOXES SERVED BY ASSOCIATED AIR HANDLING UNIT.

B.2 UNIT OPERATION:

a. FAN SHALL ENERGIZE ALONG WITH ALL BOXES SERVED BY ASSOCIATED AIR HANDLING UNIT:

1. IF SPACE CALLS FOR NO HEATING OR COOLING:
   a) HOT WATER VALVE SHALL FULL CLOSE.
   b) DAMPER SHALL MAINTAIN MINIMUM POSITION TO THE AIR HANDLING UNIT.

2. IF SPACE CALLS FOR HEATING:
   a) SIGNAL CENTRAL PLANT FOR HEATING THRU ASSOCIATED AIR HANDLING UNIT.
   b) TWO-POSITION HOT WATER VALVE SHALL CYCLE AS REQUIRED TO SATISFY SPACE.
   c) DAMPER SHALL MAINTAIN MINIMUM POSITION TO THE AIR HANDLING UNIT.

3. IF SPACE CALLS FOR COOLING:
   a) HOT WATER VALVE SHALL FULL CLOSE.
   b) SUPPLY DAMPER SHALL MODULATE AS REQUIRED TO SATISFY THE SPACE. SEE NOTE (1) BELOW.

B.3 FREEZE PROTECTION: ANYTIME:

a. SPACE OR SUPPLY AIR TEMPERATURE FALL BELOW *45F DEGREES:
   1. FAN SHALL ENERGIZE.
   2. HOT WATER VALVE SHALL FULL OPEN.

b. SPACE OR SUPPLY AIR TEMPERATURE FALL BELOW *36F DEGREES:
   1. FAN SHALL DE-ENERGIZE
   2. HOT WATER VALVE SHALL FULL OPEN.
   3. TEMPERATURE SHALL ALARM.

B.4 SCIENCE AREA FAN POWEREED BOXES: WHERE APPLICABLE, FAN POWERED BOXES IN THE SCIENCE LABS SHALL BE INTERLOCKED WITH THE PURGE FAN IN THEIR RESPECTIVE LAB, WHEN A PURGE FAN IS ENERGIZED (THRU LOCAL TWIST TIMER) THE PRIMARY DAMPER ON THE CORRESPONDING FAN POWERED BOX(ES) SHALL OPEN TO COMPENSATE FOR THE EXHAUST AIR. SIMILARLY, THE PRIMARY DAMPER SHALL BE DRIVEN OPEN ON LAB OR PREP ROOM BOXES WHEN THE APPLICABLE FUME HOOD EXHAUST FAN IS ENERGIZED.

C. DDC POINT SCHEDULE:

| | | | |
|---|---|---|---|
| SPACE TEMPERATURE | 1 EACH AI | VELOCITY SENSOR | 1 EACH AI |
| HOT WATER VALVE | 1 EACH DO | FAN START/STOP | 1 EACH DO |
| DAMPER | 1 EACH AO (1) | DISCHARGE AIR TEMP | 1 EACH AI |

NOTE (1): MAY BE ACCOMPLISHED WITH ONE ANALOG OUTPUT OR 2 DIGITAL OUTPUTS WITH FLOATING MOTOR WITH MINIMUM 110 SECOND STROKE TIME AND LIMIT SWITCHES.

* ITEMS ARE TO BE FIELD ADJUSTABLE.

FPVAV (T9-3)
Control Type 9

DWG # 5.3

JOB # VWPW

NISD Village at West Pointe West ES

San Antonio, TX

| REV # | DESCRIPTION | DATE |
|---|---|---|
| 1 | Revision 1 | 8/14/2023 |
| 0 | SUBMITTED | 4/28/2023 |

Drawn:
ENG: Dennis Schnellman


Yates Co
4738 Whirlwind Dr.
San Antonio, TX 78217
Phone: 2107023820

# NISD Village at West Pointe West ES
# VWPW

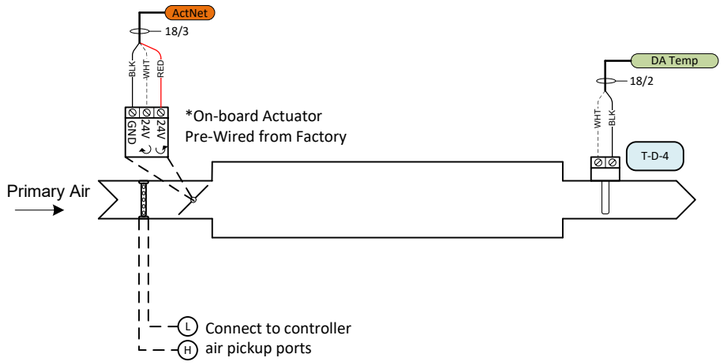


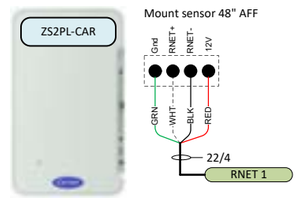


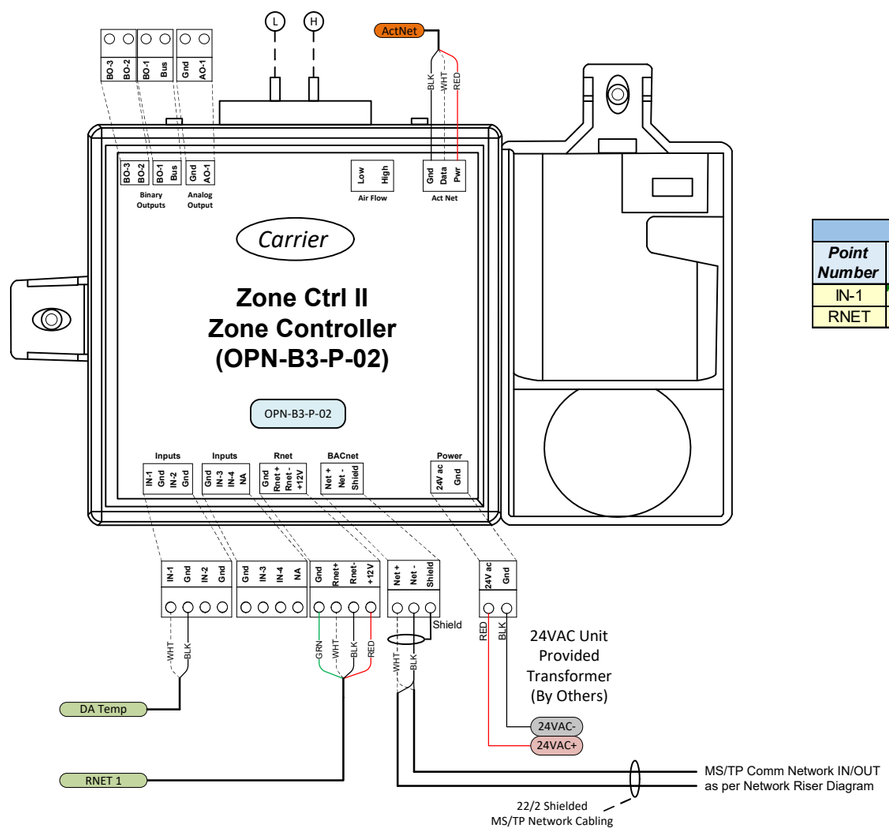


## Bill of Materials

| DID | Quantity | Part # | Manufacturer | Description |
|---|---|---|---|---|
| T-D-4 | 7 | BA/10K-2-D-4"-BBX | BAPI | Duct, 10K-2 Thermistor, Probe, 4" |
| OPN-B3-P-02 | 7 | OPN-B3-P-02 | Carrier | Programmable Zone II controller with Air Flow, Actuator, AO and 3 BO (45 in-lb) |
| ZS2PL-CAR | 7 | ZS2PL-CAR | Carrier | ZS Plus; Carrier brand space temp sensor, Setpt Adj, TLO |

**SEQUENCE - VAV TERMINAL DAMPER:**

A. OPERATIONAL CONDITIONS: UNIT SHALL OPERATE ON A USER DEFINABLE SCHEDULE:

a. OCCUPIED MODE: *75F DEGREES COOLING SETPOINT
*70F DEGREES HEATING SETPOINT

b. UNOCCUPIED MODE: *95F DEGREES COOLING SETPOINT
*55F DEGREES HEATING SETPOINT

B. OPERATIONAL SEQUENCE:

B.1 UNIT OPERATION:

a. IF SPACE CALLS FOR NO HEATING OR COOLING: DAMPER SHALL MAINTAIN MINIMUM POSITION TO SOURCE.

b. IF SPACE CALLS FOR HEATING AND SOURCE AIR IS COOLER THAN SPACE AIR: DAMPER SHALL MAINTAIN MINIMUM POSITION TO SOURCE.

c. IF SPACE CALLS FOR HEATING AND SOURCE AIR IS WARMER THAN SPACE AIR: DAMPER SHALL MODULATE AS REQUIRED TO SATISFY SPACE.

d. IF SPACE CALLS FOR COOLING AND SOURCE AIR IS WARMER THAN SPACE AIR: DAMPER SHALL MAINTAIN MINIMUM POSITION TO SOURCE.

e. IF SPACE CALLS FOR COOLING AND SOURCE AIR IS COOLER THAN SPACE AIR: DAMPER SHALL MODULATE AS REQUIRED TO SATISFY SPACE.

f. AT SHUTDOWN: DAMPER SHALL MAINTAIN MINIMUM POSITION TO SOURCE.

C. DDC POINT SCHEDULE:

| | | | |
|---|---|---|---|
| SOURCE AIR TEMP | 1 EACH AI | VAV DAMPER | 1 EACH AO |
| SPACE TEMP | 1 EACH AI | SUPPLY AIRFLOW | 1 EACH AI |

* ITEMS ARE TO BE FIELD ADJUSTABLE.

## Active Points List

| Point Number | Point Type | Point Name | Setup |
|---|---|---|---|
| IN-1 | AI | Discharge Air Temp | Therm |
| RNET | AI | Zone Temp | RNET |

Typical of 7
(See terminal unit schedule for specific units)

VAV (T12)
Control Type 12

DWG # 5.4

JOB # VWPW

NISD Village at West Pointe West ES

San Antonio, TX

| REV # | DESCRIPTION | DATE |
|---|---|---|
| 1 | Revision 1 | 8/14/2023 |
| 0 | SUBMITTED | 4/28/2023 |

Drawn:
ENG: Dennis Schnellman


Yates Co
4738 Whirlwind Dr.
San Antonio, TX 78217
Phone: 2107023820

# NISD Village at West Pointe West ES
# VWPW

## Bill of Materials

| DID | Quantity | Part # | Manufacturer | Description |
|---|---|---|---|---|
| CT-A | 3 | A/MSCS-A | ACI | Current Switch, Split Core, NO, 0 to 150A Range, Adj. Trip Point |
| T-D-8 | 1 | BA/10K-2-D-8"-BBX | BAPI | Duct, 10K-2 Thermistor, Probe, 8" |
| OPN-APP | 1 | OPN-APP | Carrier | Prog. Controller (5 BO, 6 UI, 3 AO), 2 Equipment |
| ZS2PL-CAR | 1 | ZS2PL-CAR | Carrier | ZS Plus; Carrier brand space temp sensor, Setpt Adj, TLO |
| RIB-P | 1 | RIB2401B | Functional Devices | Enclosed Relay 20 Amp SPDT, 10-30 VAC/VDC or 120 VAC Coil |
| XF50 | 1 | TR50VA004 | Functional Devices | Control Transformer (120/240/277/480 VAC Input - 24 VAC Output |
| PANEL-12x12 | 1 | AHE12X12X4 | Hoffman | Enclosure, Wall-mount, Hinged, Steel, NEMA1, 12"x12"x4" |

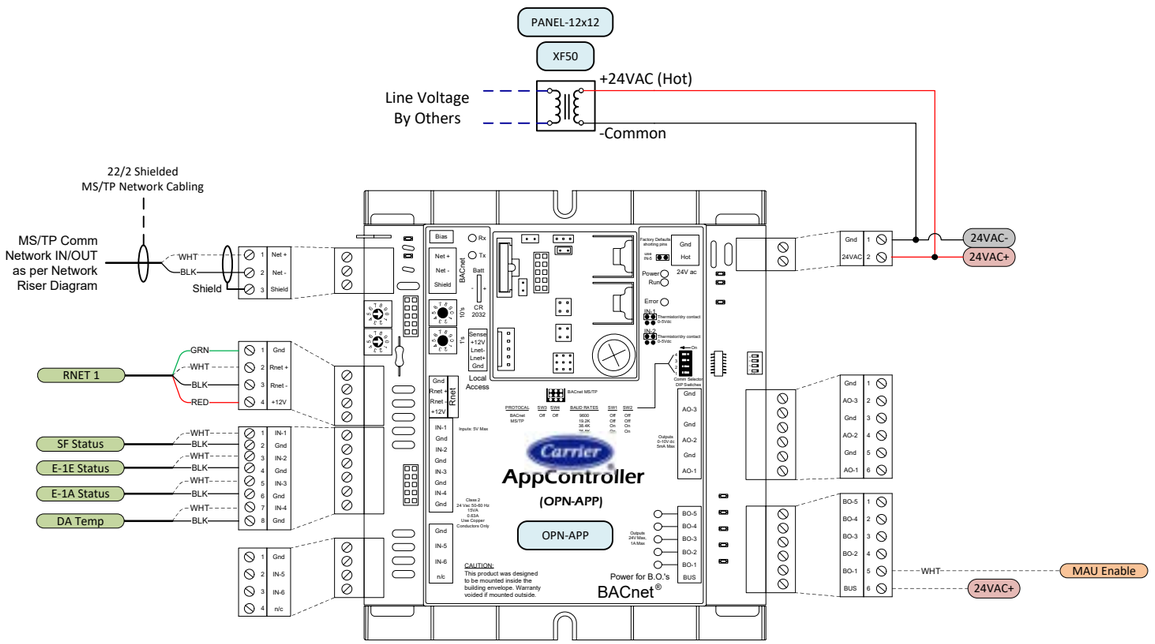


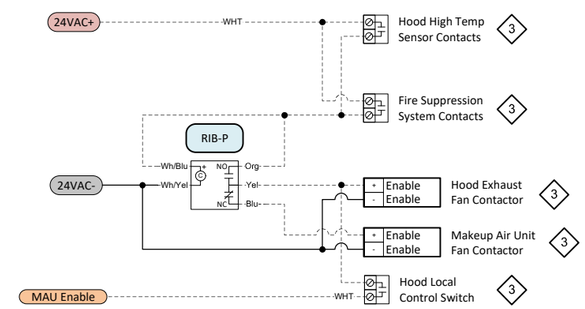


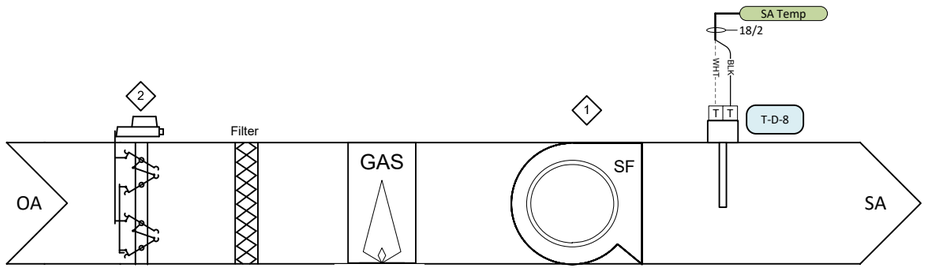


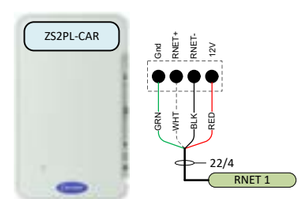


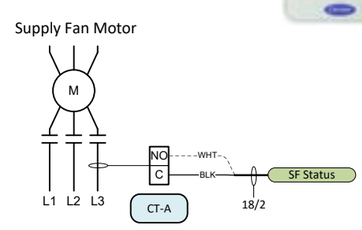


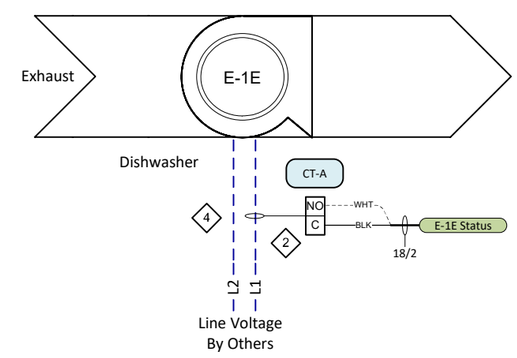


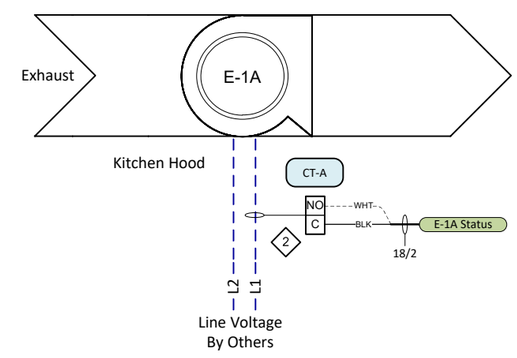


| Key Drawing Notes: | |
|---|---|
| 1 | Verify terminations for as-built record. Confirm unit components and operation. |
| 2 | Ensure damper interlock to MAU operation |
| 3 | Provided by others |
| 4 | Interlock exhaust fan with dishwasher operation |

General Notes:
1. Refer to Network Diagram and Cable Specification Chart for wiring details and control module address.
2. Coordinate with Electrical Contractor (Div. 26) to provide 120 VAC circuit power to control panels.
3. Refer to Carrier Technical Documentation for specifications on control module setup, wiring, and driver configuratio

MAU-1 / Kitchen
Control Type 27

DWG # 7.1

JOB # VWPW

NISD Village at West Pointe West ES

San Antonio, TX

Drawn:
ENG: Dennis Schnellman

| REV # | DESCRIPTION | DATE |
|---|---|---|
| 0 | SUBMITTED | 4/28/2023 |


Yates Co
4738 Whirlwind Dr.
San Antonio, TX 78217
Phone: 2107023820

**SEQUENCE - KITCHEN HOOD VENTILATION SYSTEM:**

A. THE KITCHEN HOOD VENTILATION SYSTEM SHALL BE ENABLED ANYTIME THE ASSOCIATED KITCHEN AHU IS ENABLED.

B. THE KITCHEN HOOD EXHAUST AND MAKE-UP AIR SHALL BE ENERGIZED ANYTIME THE LOCAL OFF/AUTO SWITCH IS IN THE AUTO/RUN POSITION, AND THE SYSTEM IS ENABLED.

C. THE MAKE-UP AIR UNIT INTERNAL, MODULATION HEATER AND INLET DAMPER SHALL BE CONTROLLED BY THE UNIT'S FACTORY CONTROLS.

D. ANYTIME THE HOOD TEMPERATURE SENSOR DETECTS AN INTERNAL TEMPERATURE OF *110F DEGREES, THE HOOD EXHAUST AND MAKE-UP FANS SHALL BE ENERGIZED, REGARDLESS OF THE STATUS OF ZONE ENABLE OR THE POSITION OF THE LOCAL FAN SWITCHES. ON A DROP IN TEMPERATURE BELOW THE SETPOINT AT THE HOOD SENSOR, THE EXHAUST AND MAKE-UP FAN CONTROL SHALL BE RETURNED TO THE PREVIOUS MODE.

E. ANYTIME THE KITCHEN HOOD FIRE EXTINGUISHING SYSTEM IS ACTIVATED, THE HOOD EXHAUST FAN(S) SHALL BE ENERGIZED, THE MAKE-UP UNIT(S) SHALL BE DE-ENERGIZED, AND THE EMS SHALL ALARM.

F. DDC POINT SCHEDULE:

| | | | |
|---|---|---|---|
| EXH FAN(S) START/STOP | 1 EA DO | MAKE-UP FAN START/STOP | 1 EA DO |
| EXH FAN(S) STATUS | 1 EA DI | MAKE-UP FAN STATUS | 1 EA DI |
| HOOD(S) HIGH TEMP | 1 EA AI | FIRE SUPPRESSION STATUS | 1 EA DI |
| FIRE SUPRESSION ALARM | 1 EA DO | | |

**SEQUENCE - TYPICAL KITCHEN HOOD:**

A. EACH KITCHEN EXHAUST HOOD SHALL HAVE A LOCAL OFF/AUTO SWITCH TO PERMIT LOCAL ON/OFF CONTROL WHEN THE KITCHEN ZONE IS SCHEDULED ON BY THE EMS. HOODS EQUIPPED WITH AN AUTOMATIC FIRE EXTINGUISHING SYSTEM SHALL HAVE AN INTERLOCK THAT WILL OVERRIDE THE EMS AND/OR LOCAL SWITCH AND ENERGIZE THE EXHAUST FAN ANYTIME THE HOOD FIRE EXTINGUISHER IS ACTIVATED. IN PARALLEL WITH THE ABOVE, ANY TYPE 1 HOOD OVER COOKING APPLIANCES SHALL HAVE A TEMPERATURE SENSOR WHICH WILL ENERGIZE THE HOOD'S EXHAUST FAN ANYTIME THE HOODS INTERNAL TEMPERATURE EXCEEDS 110 F DEGREES (ADJUSTABLE).

| MARK | SERVES | CONTROL POINTS AND INTERLOCKS |
|---|---|---|
| | KITCHEN | KITCHEN AHU AND INTERLOCKED EQUIPMENT SHALL OPERATE ON SCHEDULED START/STOP. WHEN KITCHEN HOODS ARE ENERGIZED, ASSOCIATED EQUIPMENT SHALL OPERATE AS FOLLOWS: |
| E-1A | KITCHEN HOOD | HARDWIRE INTERLOCK HOOD EXHAUST FAN E-1A WITH MAKEUP AIR UNIT (MU-1); 1 EACH DO: SOFTWARE INTERLOCK HOOD EXHAUST FAN WITH AH-1 FOR ENABLE/DISABLE OF LOCAL SWITCH; 1 EACH AI: TEMPERATURE SENSOR IN HOOD TO START/STOP FAN (DO) ANYTIME HOOD TEMPERATURE REACHES *110 F DEGREES. |
| E-1D | KITCHEN EXH. | FAN SHALL BE INTERLOCKED TO OPERATE WITH THE ZONE AHU (AH-1). ANYTIME THE KITCHEN HOOD EXHAUST FAN (E-1A) IS ENERGIZED THIS FAN SHALL DE-ENERGIZE. |

| Active Points List | | | |
|---|---|---|---|
| ***Point Number*** | ***Point Type*** | ***Point Name*** | ***Setup*** |
| IN-1 | DI | SF Status | Therm |
| IN-2 | DI | E-1E Status | Therm |
| IN-3 | DI | E-1A Status | Therm |
| IN-4 | AI | Discharge Air Temp | Therm |
| BO-1 | DO | MAU Enable | Relay |
| RNET | AI | Zone Temp | RNET |

| FOOD SERVICE FAN INTERLOCK SCHEDULE | | | |
|---|---|---|---|
| AH-1 STATUS (KITCHEN) | E-1C STATUS (T/R'S) | E-1A STATUS (HOOD) | E-1D STATUS (KIT. EXH) |
| ON | ON | ON | OFF |
| ON | ON | OFF | ON |

## Exhaust Fans E-1E

**SEQUENCE - FAN INTERLOCKED WITH APPLIANCE (DISHWASHER):**

A. SEE FAN SCHEDULE FOR FANS WITH THIS CONTROL TYPE.

B. THE FAN SHALL BE HARDWIRE INTERLOCKED TO BE ENERGIZED ANYTIME THE ASSOCIATED APPLIANCE IS IN OPERATION.

C. DDC POINT SCHEDULE:

| | | | |
|---|---|---|---|
| FAN START/STOP | 1 EA DO | FAN STATUS | 1 EA DI |

MAU-1 Sequence
Control Type 27
DWG # 7.2
JOB # VWPW

NISD Village at West Pointe West ES
San Antonio, TX

| REV # | DESCRIPTION | DATE |
|---|---|---|
| 0 | SUBMITTED | 4/28/2023 |
| 1 | Revision 1 | 8/14/2023 |

Drawn:
ENG: Dennis Schnellman

Yates Co
4738 Whirlwind Dr.
San Antonio, TX 78217
Phone: 2107023820

NISD Village at West Pointe West ES
VWPW

## Exhaust Fan Schedule

| Type | Unit Tag | Location | Area Served | Control Type | Controller | Controller Type | Panel |
|---|---|---|---|---|---|---|---|
| 27,28,30 | E-1A | Area B 1st Floor | Kitchen Hood | Makeup Unit | MAU controller | OPN-APP | Mount in 12x12 Panel |
| 16 | E-1B | Area B 1st Floor | Kitchen Pantry | Pantry Fan | EF Controller 6 | OPN-UC | Mount in 12x12 Panel |
| 13 | E-1C | Area B 1st Floor | Kitchen T/R | Interlock with AHU-1 | EF Controller 6 | OPN-UC | Mount in 12x12 Panel |
| 30 | E-1D | Area B 1st Floor | Kitchen | Misc. Fans | EF Controller 6 | OPN-UC | Mount in 12x12 Panel |
| 23 | E-1E | Area B 1st Floor | Kitchen Dishmachine | Fan Interlocked with Appliance | MAU controller | OPN-APP | Mount in 12x12 Panel |
| 13 | E-3 | Area B 1st Floor | Family T/R and Custodian | Interlock with AHU-3 | EF Controller 1 | OPN-UC | Mount in AH-3 Panel |
| 13 | E-5 | Area B 1st Floor | Café & Gym T/R's | Interlock with AHU-4 | EF Controller 1 | OPN-UC | Mount in AH-3 Panel |
| 13 | E-6 | Area A 1st Floor | Library Office/Workroom | Interlock with AHU-6 | EF Controller 2 | OPN-UC | Mount in AH-8 Panel |
| 13 | E-7 | Area A 1st Floor | Admin East | Interlock with AHU-7 | EF Controller 2 | OPN-UC | Mount in AH-8 Panel |
| 13 | E-8 | Area A 1st Floor | Admin West | Interlock with AHU-8 | EF Controller 2 | OPN-UC | Mount in AH-8 Panel |
| 11 | E-9A | Area A 1st Floor | Art C/R | Art Lab Exhaust Fan | EF Controller 3 | OPN-APP | Mount in 12x12 Panel |
| 21 | E-9B | Area A 1st Floor | Kiln Room | Art Kiln Room Exhaust | EF Controller 3 | OPN-APP | Mount in 12x12 Panel |
| 13 | E-9C | Area A 1st Floor | A1 T/R's | Interlock with AHU-9 | EF Controller 2 | OPN-UC | Mount in AH-8 Panel |
| 13 | E-10A | Area C 2nd Floor | C1 T/R's | Interlock with AHU-10 | EF Controller 4 | OPN-UC | Mount in AH-12 Panel |
| 13 | E-10B | Area C 2nd Floor | C1 T/R's | Interlock with AHU-10 | EF Controller 4 | OPN-UC | Mount in AH-12 Panel |
| 13 | E-11 | Area E 1st Floor | D1 & E1 T/R's | Interlock with AHU-11 | EF Controller 5 | OPN-UC | Mount in AH-11 Panel |
| 13 | E-12A | Area C 2nd Floor | C2 Group T/R's | Interlock with AHU-12 | EF Controller 4 | OPN-UC | Mount in AH-12 Panel |
| 13 | E-12B | Area C 2nd Floor | C2 Single T/R's | Interlock with AHU-12 | EF Controller 4 | OPN-UC | Mount in AH-12 Panel |
| 13 | E-13A | Area D 2nd Floor | D1 & D2 Custodian | Interlock with AHU-13 | EF Controller 5 | OPN-UC | Mount in AH-11 Panel |
| 13 | E-13B | Area E 2nd Floor | D2 & E2 T/R's | Interlock with AHU-13 | EF Controller 5 | OPN-UC | Mount in AH-11 Panel |
| 13 | E-14 | Area E 2nd Floor | E2 Custodian & T/R's | Interlock with AHU-14 | EF Controller 5 | OPN-UC | Mount in AH-11 Panel |
| 15 | E-15 | Area B Mech 1st Floor | Main Elec | Fan controlled by local sensor | OPN-UCXP HW Controller | OPN-UCXP HW Controller | HW System Panel |
| 17 | E-16 | Area B Mech 1st Floor | Boiler Room | Boiler Rm Heating and Ventilation | OPN-UCXP HW Controller | OPN-UCXP HW Controller | HW System Panel |
| 10 | E-17 | Area B Mech 1st Floor | Underfloor | Underfloor Ventilation | OPN-UCXP HW Controller | OPN-UCXP HW Controller | HW System Panel |
| 15 | E-18 | Area E 1st Floor | Elevator Closet | Controlled by local sensor | EF Controller 7 | OPN-UC | Mount in AH-9 Panel |

Exhaust Fan Schedule
DWG # 8.0.1
JOB # VWPW
NISD Village at West Pointe West ES
San Antonio, TX
Drawn: ENG: Dennis Schnellman
4/28/2023
DATE
SUBMITTED
DESCRIPTION
0
REV #

Yates Co
4738 Whirlwind Dr.
San Antonio, TX 78217
Phone: 2107023820

NISD Village at West Pointe West ES
VWPW

## Bill of Materials

| DID | Quantity | Part # | Manufacturer | Description |
|---|---|---|---|---|
| CT-A | 2 | A/MSCS-A | ACI | Current Switch, Split Core, NO, 0 to 150A Range, Adj. Trip Point |
| OPN-UC | 1 | OPN-UC | Carrier | Prog. Controller (5 BO, 6 UI), 5 Equipment |
| RIB-P | 2 | RIB2401B | Functional Devices | Enclosed Relay 20 Amp SPDT, 10-30 VAC/VDC or 120 VAC Coil |

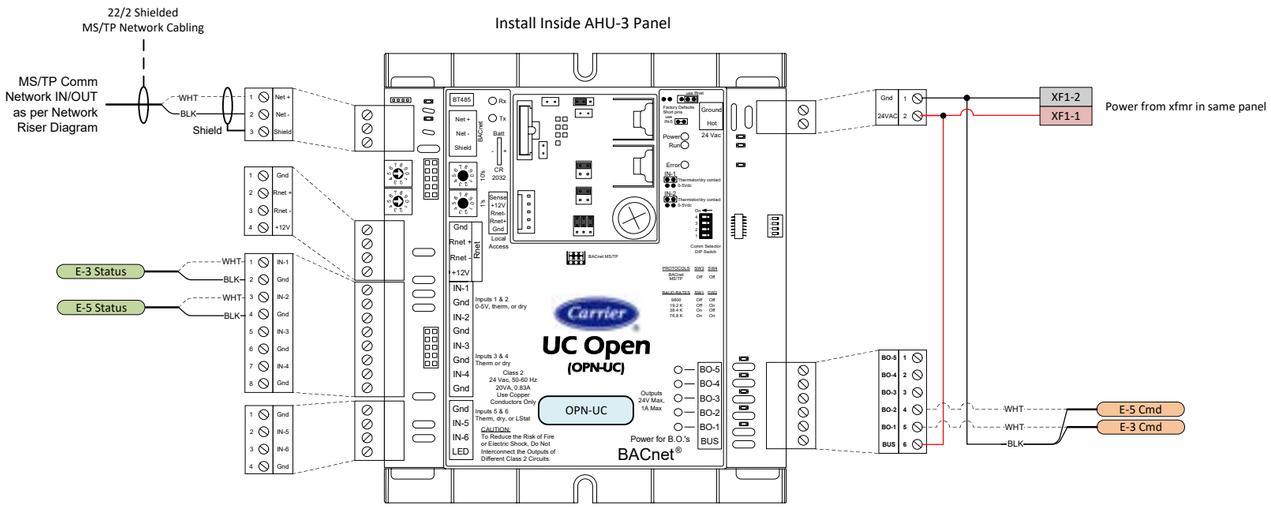


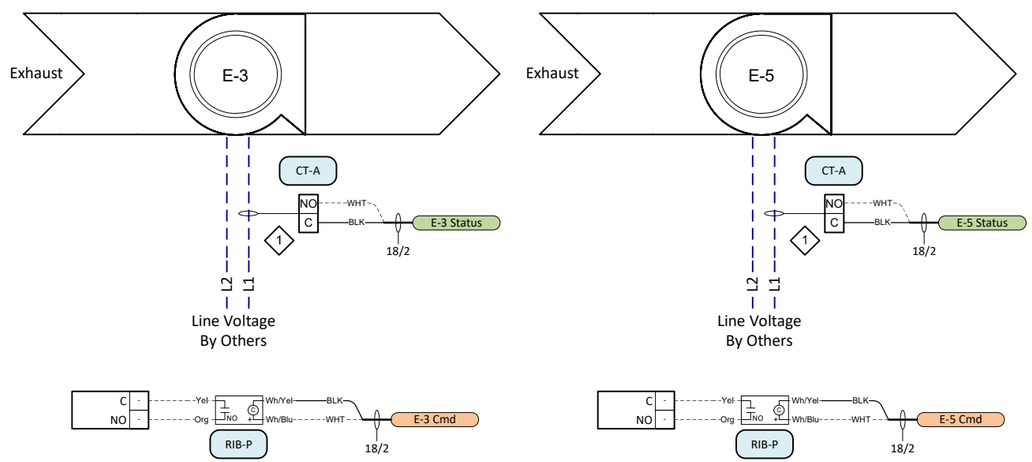


### Exhaust Fans E-3 & E-5

SEQUENCE - FAN SOFTWARE INTERLOCKED WITH AHU:

A. FAN SHALL START/STOP IN PARALLEL WITH THE OCCUPIED MODE OF THE ASSOCIATED AHU (OR RTU).

B. FAN SHALL NOT BE ENERGIZED DURING AHU/RTU MORNING START-UP.

C. FAN SHALL BE INDICATED ON THE GRAPHIC FOR THE APPLICABLE AHU/RTU.

D. DDC POINT SCHEDULE:

FAN START/STOP 1 EACH DO FAN STATUS 1 EACH DI

## Active Points List

| Point Number | Point Type | Point Name | Setup |
|---|---|---|---|
| IN-1 | DI | E-3 Status | DC |
| IN-2 | DI | E-5 Status | DC |
| BO-1 | DO | E-3 Command | Relay |
| BO-2 | DO | E-5 Command | Relay |

| Key Drawing Notes: | |
|---|---|
| 1 | Remove jumper wire and replace with wiring as shown. Refer to manufacturer provided installation instructions for specific terminations |
| 2 | Install current switch around incoming power leg |
| 3 | Set thermostat per sequence |
| 4 | Wiring specification unknown at time of submission, confirm required terminations and wire specifications with Kiln shunt equipment |

General Notes:
1. Refer to Network Diagram and Cable Specification Chart for wiring details and control module address.
2. Coordinate with Electrical Contractor (Div. 26) to provide 120 VAC circuit power to control panels.
3. Refer to Carrier Technical Documentation for specifications on control module setup, wiring, and driver configuration

E-3 & E-5 (T13)
Control Type 13
DWG # 8.1
JOB # VWPW

NISD Village at West Pointe West ES
San Antonio, TX

| REV # | DESCRIPTION | DATE |
|---|---|---|
| 1 | Revision 1 | 8/14/2023 |
| 0 | SUBMITTED | 4/28/2023 |

Drawn:
ENG: Dennis Schnellman


Yates Co
4738 Whirlwind Dr.
San Antonio, TX 78217
Phone: 2107023820

NISD Village at West Pointe West ES
VWPW

## Bill of Materials

| DID | Quantity | Part # | Manufacturer | Description |
|---|---|---|---|---|
| CT-A | 4 | A/MSCS-A | ACI | Current Switch, Split Core, NO, 0 to 150A Range, Adj. Trip Point |
| OPN-UC | 1 | OPN-UC | Carrier | Prog. Controller (5 BO, 6 UI), 5 Equipment |
| RIB-P | 4 | RIB2401B | Functional Devices | Enclosed Relay 20 Amp SPDT, 10-30 VAC/VDC or 120 VAC Coil |

## Active Points List

| Point Number | Point Type | Point Name | Setup |
|---|---|---|---|
| IN-1 | DI | E-6 Status | DC |
| IN-2 | DI | E-7 Status | DC |
| IN-3 | DI | E-8 Status | DC |
| IN-4 | DI | E-9C Status | DC |
| BO-1 | DO | E-6 Command | Relay |
| BO-2 | DO | E-7 Command | Relay |
| BO-3 | DO | E-8 Command | Relay |
| BO-4 | DO | E-9C Command | Relay |

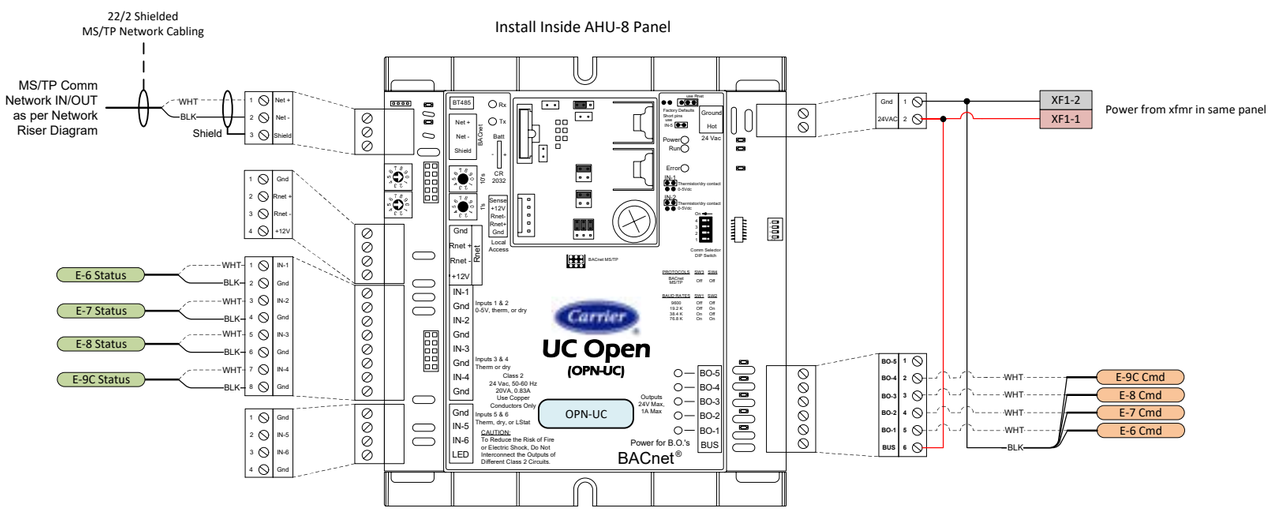


### Exhaust Fans E-6, E-7, E-8,9C

SEQUENCE - FAN SOFTWARE INTERLOCKED WITH AHU:

A. FAN SHALL START/STOP IN PARALLEL WITH THE OCCUPIED MODE OF THE ASSOCIATED AHU (OR RTU).

B. FAN SHALL NOT BE ENERGIZED DURING AHU/RTU MORNING START-UP.

C. FAN SHALL BE INDICATED ON THE GRAPHIC FOR THE APPLICABLE AHU/RTU.

D. DDC POINT SCHEDULE:

FAN START/STOP 1 EACH DO FAN STATUS 1 EACH DI

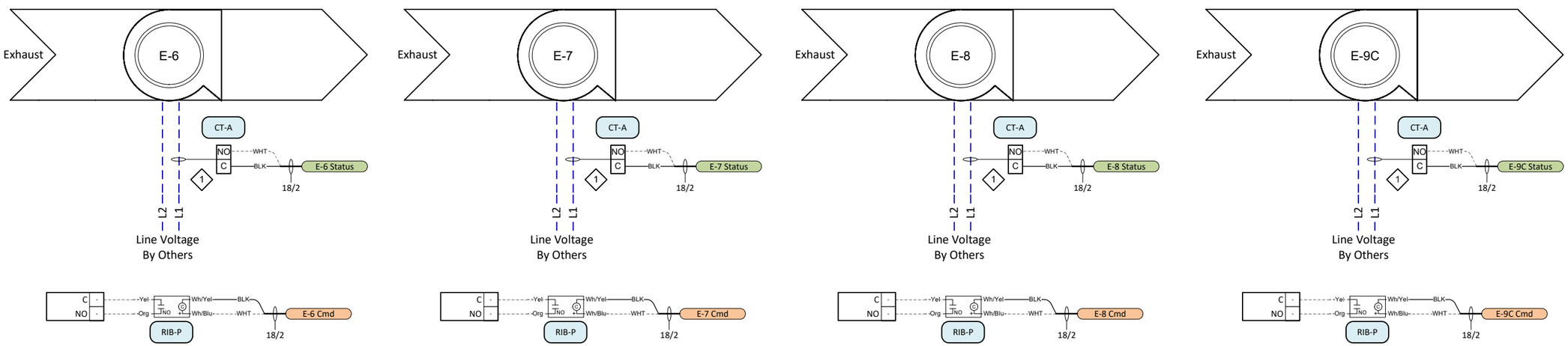


| Key Drawing Notes: | |
|---|---|
| 1 | Remove jumper wire and replace with wiring as shown. Refer to manufacturer provided installation instructions for specific terminations |
| 2 | Install current switch around incoming power leg |
| 3 | Set thermostat per sequence |
| 4 | Wiring specification unknown at time of submission, confirm required terminations and wire specifications with Kiln shunt equipment |

General Notes:
1. Refer to Network Diagram and Cable Specification Chart for wiring details and control module address.
2. Coordinate with Electrical Contractor (Div. 26) to provide 120 VAC circuit power to control panels.
3. Refer to Carrier Technical Documentation for specifications on control module setup, wiring, and driver configuration

E-6,7,8,9C (T13)
Conotrol Type 13
DWG # 8.2
JOB # VWPW

NISD Village at West Pointe West ES
San Antonio, TX

Drawn:
ENG: Dennis Schnellman

| REV # | DESCRIPTION | DATE |
|---|---|---|
| 1 | Revision 1 | 8/14/2023 |
| 0 | SUBMITTED | 4/28/2023 |


Yates Co
4738 Whirlwind Dr.
San Antonio, TX 78217
Phone: 2107023820

# NISD Village at West Pointe West ES
# VWPW

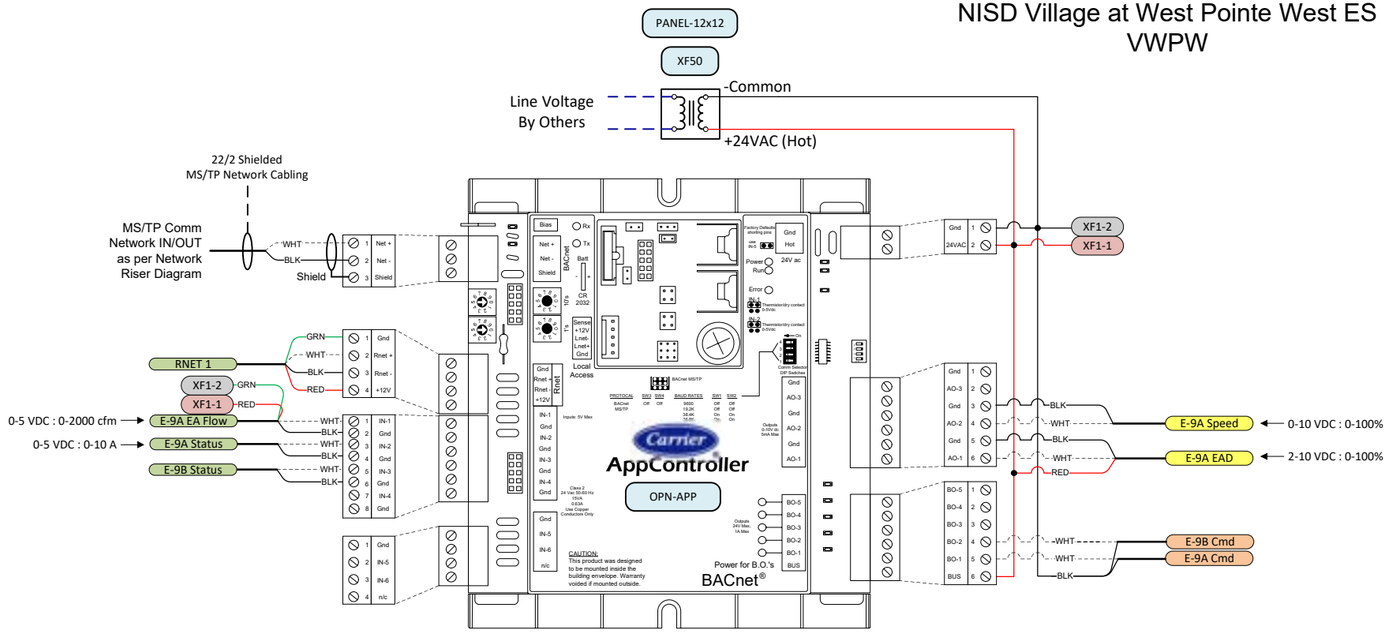


## Bill of Materials

| DID | Quantity | Part # | Manufacturer | Description |
|---|---|---|---|---|
| CT-A | 1 | A/MSCS-A | ACI | Current Switch, Split Core, NO, 0 to 150A Range, Adj. Trip Point |
| OPN-APP | 1 | OPN-APP | Carrier | Prog. Controller (5 BO, 6 UI, 3 AO), 2 Equipment |
| ZS2-CAR | 1 | ZS2-CAR | Carrier | ZS Standard; Carrier brand space temp sensor |
| HL-T | 2 | A122-7 | Columbus Electric | Wall Hi Limit Thermostat, 120-240 VAC, 80-130°F |
| RIB | 2 | RIBU1C | Functional Devices | Enclosed Relay 10 Amp SPDT, 10-30 VAC/VDC or 120 VAC Coil |
| CT-A-5 | 1 | RIBXGTV5-10 | Functional Devices | Current Transducer, Split Core, 0-10 Amp, 0-5 Vdc Terminal Output |
| XF50 | 1 | TR50VA015 | Functional Devices | Control Transformer (120/208/240/277/480 VAC Input - 24 VAC Output |
| PANEL-12x12 | 1 | AHE12X12X4 | Hoffman | Enclosure, Wall-mount, Hinged, Steel, NEMA1, 12"x12"x4" |
| EAD | 1 | See Schedule | See Schedule | Control Damper Actuator |
| AFT | 1 | See Schedule | See Schedule | Air Flow Station |
| TW-T | 1 | C412H | TORK | Spring-Wound Timer: 0 to 12 hr, Silver, 20 A Max. Amps @ 125VAC, 1 Gangs, DPST |

## Active Points List

| Point Number | Point Type | Point Name | Setup |
|---|---|---|---|
| IN-1 | DI | E-9A EA Flow | 0-5v |
| IN-2 | DI | E-9A Status | 0-5v |
| IN-3 | DI | E-9B Status | DC |
| AO-1 | DI | E-9A EAD | 0-10v |
| AO-2 | DO | E-9A Speed | 0-10v |
| BO-1 | DO | E-9A Cmd | Relay |
| BO-2 | DO | E-9B Cmd | Relay |
| RNET | AI | Zone Temp | RNET |

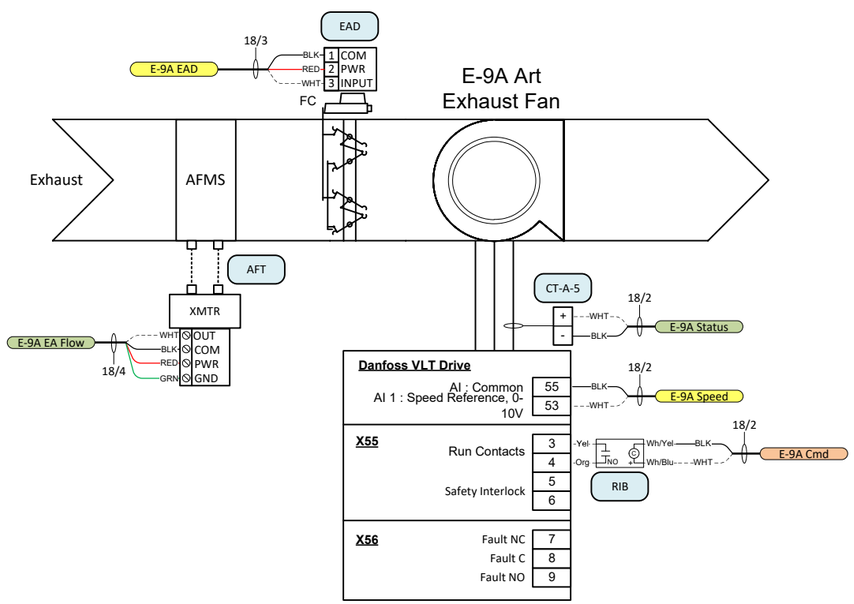


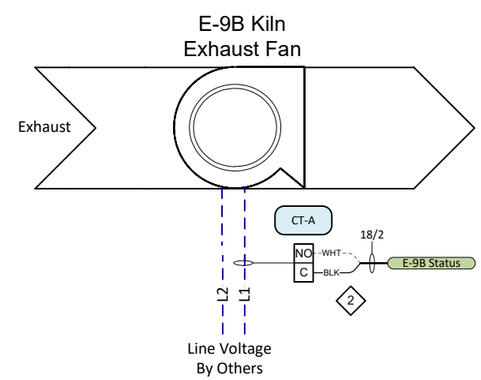


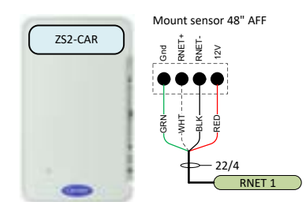


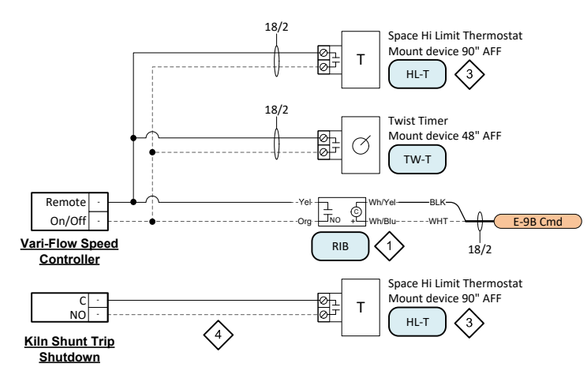


| Key Drawing Notes: | |
|---|---|
| 1 | Remove jumper wire and replace with wiring as shown. Refer to manufacturer provided installation instructions for specific terminations |
| 2 | Install current switch around incoming power leg |
| 3 | Set thermostat per sequence |
| 4 | Confirm required terminations and wire specifications with Kiln shunt equipment |

General Notes:
1. Refer to Network Diagram and Cable Specification Chart for wiring details and control module address.
2. Coordinate with Electrical Contractor (Div. 26) to provide 120 VAC circuit power to control panels.
3. Refer to Carrier Technical Documentation for specifications on control module setup, wiring, and driver configuration

E-9A & 9B (T11.21)
Control Type 11 & 21
DWG # 8.3
JOB # VWPW

NISD Village at West Pointe West ES
San Antonio, TX

Drawn:
ENG: Dennis Schnellman

| REV # | DESCRIPTION | DATE |
|---|---|---|
| 0 | SUBMITTED | 4/28/2023 |


Yates Co
4738 Whirlwind Dr.
San Antonio, TX 78217
Phone: 2107023820

## E-9A

**SEQUENCE - ART LAB EXHAUST FAN:**

A. THE EXHAUST FAN SHALL BE ENERGIZED ANYTIME THE AHU SERVING THE ART LAB IS ENERGIZED.

B. THE EXHAUST FAN SHALL BE INTERLOCKED WITH THE LOCAL FAN POWERED BOX (FPB) THAT SERVES THE SAME SPACE. WHEN THE FPB IS ENERGIZED, THE FAN SHALL EXHAUST A NET *100 CFM MORE FROM THE ART LAB SUITE, THAN THE PRIMARY AIR SUPPLY CFM TO THE FPB.

C. WHEN ENERGIZED, THE EXHAUST FAN SHALL START AT MINIMUM SPEED AND THE MOTORIZED DAMPER SHALL MODULATE, AS REQUIRED TO SATISFY THE EXHAUST FLOW (CFM) SETPOINT. AFTER THE MOTORIZED DAMPER IS FULL OPEN, THE FAN SPEED SHALL MODULATE, AS REQUIRED TO SATISFY THE EXHAUST (CFM) SETPOINT.

D. THE EXHAUST (CFM) SETPOINT SHALL BE CALCULATED AS THE PRIMARY AIR CFM AT THE FPB LESS THE CFM BEING EXHAUSTED DIRECTLY FROM THE KILN ROOM. THE SCHEDULED KILN EXHAUST RATE IS 300 CFM (CONSTANT); THEREFORE THE ART LAB EXHAUST (CFM) SET POINT SHALL BE CALCULATED AS FOLLOWS:

ART LAB EXHAUST SETPOINT (CFM) = FPB PRIMARY AIR CFM - *300 CFM + *100 CFM

E. DDC POINT SCHEDULE:

| | | | |
|---|---|---|---|
| EXHAUST AIR DAMPER | 1 EACH AO | EXHAUST FAN SPEED | 1 EACH AO |
| EXHAUST FAN START/STOP | 1 EACH DO | EXHAUST FAN STATUS | 1 EACH DI |
| EXHAUST AIR FLOW | 1 EACH AI | | |

* ITEMS ARE TO BE FIELD ADJUSTABLE.

## E-9B

**SEQUENCE - ART KILN ROOM EXHAUST FAN:**

A. ROOM SHALL HAVE A DIRECT DRIVE EXHAUST FAN EXHAUSTING TO THE EXTERIOR OF THE BUILDING.

B. THE EXHAUST FAN SHALL BE ENERGIZED BY THE EMS ANYTIME THE ART ROOM'S AHU IS ENERGIZED.

C. THE EXHAUST FAN SHALL BE ENERGIZED BY A 12-HOUR (NO HOLD) TWIST TIMER INDEPENDENT OF THE EMS FOR LOCAL CONTROL.

D. THE KILN ROOM SHALL HAVE A NON-EMS THERMOSTAT IN THE ROOM TO ENERGIZE THE EXHAUST FAN ANYTIME THE ROOM TEMPERATURE EXCEEDS *105F DEGREES.

E. THE EMS SHALL ENERGIZE THE EXHAUST FAN AND ALARM ANYTIME THE ROOM TEMPERATURE EXCEEDS *110F DEGREES.

F. FOR ADDITIONAL SAFETY, THE KILN ROOM SHALL HAVE AN ADDITIONAL NON-EMS THERMOSTAT IN THE ROOM TO TRIP THE KILN SHUNT TRIP BREAKER, TO DE-ENERGIZE THE KILN ANYTIME THE ROOM TEMPERATURE EXCEEDS *125F DEGREES.

G. THE EMS SHALL ALARM ANYTIME THE EXHAUST FAN IS ENERGIZED WHEN NOT SCHEDULED BY THE EMS.

H. DDC POINT SCHEDULE:

| | | | |
|---|---|---|---|
| FAN START/STOP | 1 EA DO | SPACE TEMPERATURE | 1 EA AI |
| FAN STATUS | 1 EA DI | SPACE ALARM | 1 EA DO |

* ITEMS ARE TO BE FIELD ADJUSTABLE.

E-9A & E-9B Sequence
Control Type 11 & 21
JOB # VWPW
DWG # 8.4

NISD Village at West Pointe West ES
San Antonio, TX

| REV # | DESCRIPTION | DATE |
|---|---|---|
| 1 | Revision 1 | 8/14/2023 |
| 0 | SUBMITTED | 4/28/2023 |

Drawn:
ENG: Dennis Schnellman

Yates Co
4738 Whirlwind Dr.
San Antonio, TX 78217
Phone: 2107023820

NISD Village at West Pointe West ES
VWPW

## Bill of Materials

| DID | Quantity | Part # | Manufacturer | Description |
|---|---|---|---|---|
| CT-A | 4 | A/MSCS-A | ACI | Current Switch, Split Core, NO, 0 to 150A Range, Adj. Trip Point |
| OPN-UC | 1 | OPN-UC | Carrier | Prog. Controller (5 BO, 6 UI), 5 Equipment |
| RIB-P | 4 | RIB2401B | Functional Devices | Enclosed Relay 20 Amp SPDT, 10-30 VAC/VDC or 120 VAC Coil |

## Active Points List

| Point Number | Point Type | Point Name | Setup |
|---|---|---|---|
| IN-1 | DI | E-10A Status | DC |
| IN-2 | DI | E-10B Status | DC |
| IN-3 | DI | E-12A Status | DC |
| IN-4 | DI | E-12B Status | DC |
| BO-1 | DO | E-10A Command | Relay |
| BO-2 | DO | E-10B Command | Relay |
| BO-3 | DO | E-12A Command | Relay |
| BO-4 | DO | E-12B Command | Relay |

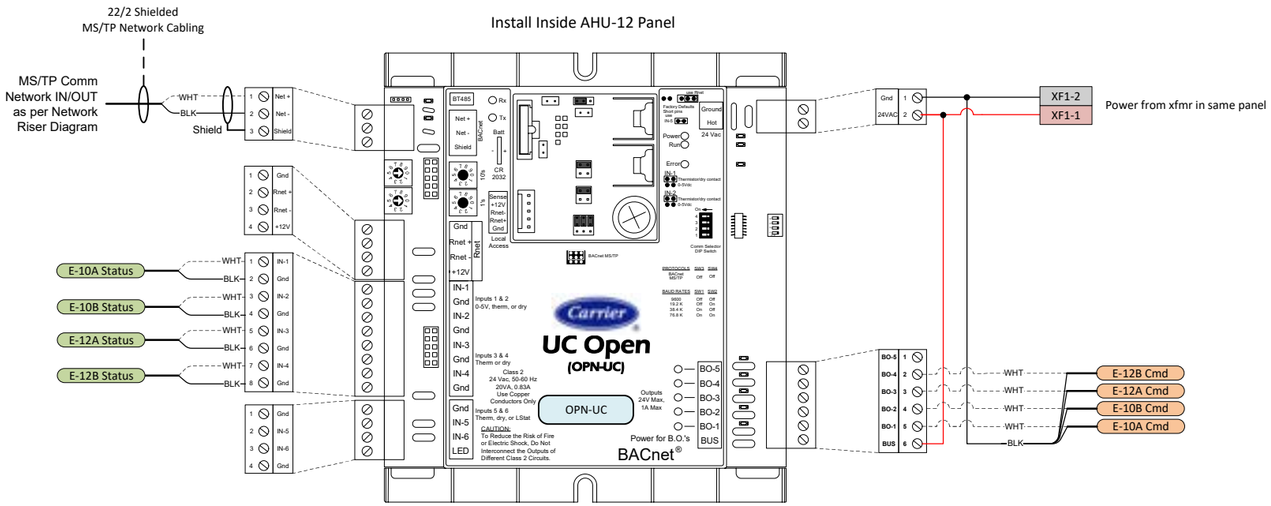


### Exhaust Fans E-10A,10B,12A,12B

SEQUENCE - FAN SOFTWARE INTERLOCKED WITH AHU:

A. FAN SHALL START/STOP IN PARALLEL WITH THE OCCUPIED MODE OF THE ASSOCIATED AHU (OR RTU).

B. FAN SHALL NOT BE ENERGIZED DURING AHU/RTU MORNING START-UP.

C. FAN SHALL BE INDICATED ON THE GRAPHIC FOR THE APPLICABLE AHU/RTU.

D. DDC POINT SCHEDULE:

FAN START/STOP 1 EACH DO FAN STATUS 1 EACH DI

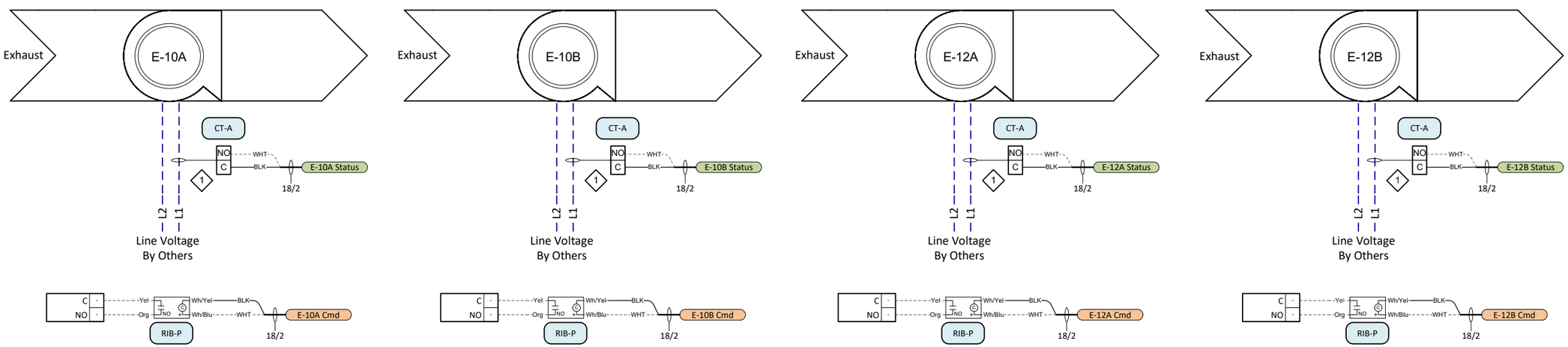


| Key Drawing Notes: | |
|---|---|
| 1 | Remove jumper wire and replace with wiring as shown. Refer to manufacturer provided installation instructions for specific terminations |
| 2 | Install current switch around incoming power leg |
| 3 | Set thermostat per sequence |
| 4 | Wiring specification unknown at time of submission, confirm required terminations and wire specifications with Kiln shunt equipment |

General Notes:
1. Refer to Network Diagram and Cable Specification Chart for wiring details and control module address.
2. Coordinate with Electrical Contractor (Div. 26) to provide 120 VAC circuit power to control panels.
3. Refer to Carrier Technical Documentation for specifications on control module setup, wiring, and driver configuration

E-10A,10B,12A,12B (T13)
Control Type 13
DWG # 8.5
JOB # VWPW

NISD Village at West Pointe West ES
San Antonio, TX

| REV # | DESCRIPTION | DATE |
|---|---|---|
| 1 | Revision 1 | 8/14/2023 |
| 0 | SUBMITTED | 4/28/2023 |

Drawn:
ENG: Dennis Schnelman


Yates Co
4738 Whirlwind Dr.
San Antonio, TX 78217
Phone: 2107023820

NISD Village at West Pointe West ES
VWPW

## Bill of Materials

| DID | Quantity | Part # | Manufacturer | Description |
|---|---|---|---|---|
| CT-A | 4 | A/MSCS-A | ACI | Current Switch, Split Core, NO, 0 to 150A Range, Adj. Trip Point |
| OPN-UC | 1 | OPN-UC | Carrier | Prog. Controller (5 BO, 6 UI), 5 Equipment |
| RIB-P | 4 | RIB2401B | Functional Devices | Enclosed Relay 20 Amp SPDT, 10-30 VAC/VDC or 120 VAC Coil |

## Active Points List

| Point Number | Point Type | Point Name | Setup |
|---|---|---|---|
| IN-1 | DI | E-11 Status | DC |
| IN-2 | DI | E-13A Status | DC |
| IN-3 | DI | E-13B Status | DC |
| IN-4 | DI | E-14 Status | DC |
| BO-1 | DO | E-11 Command | Relay |
| BO-2 | DO | E-13A Command | Relay |
| BO-3 | DO | E-13B Command | Relay |
| BO-4 | DO | E-14 Command | Relay |

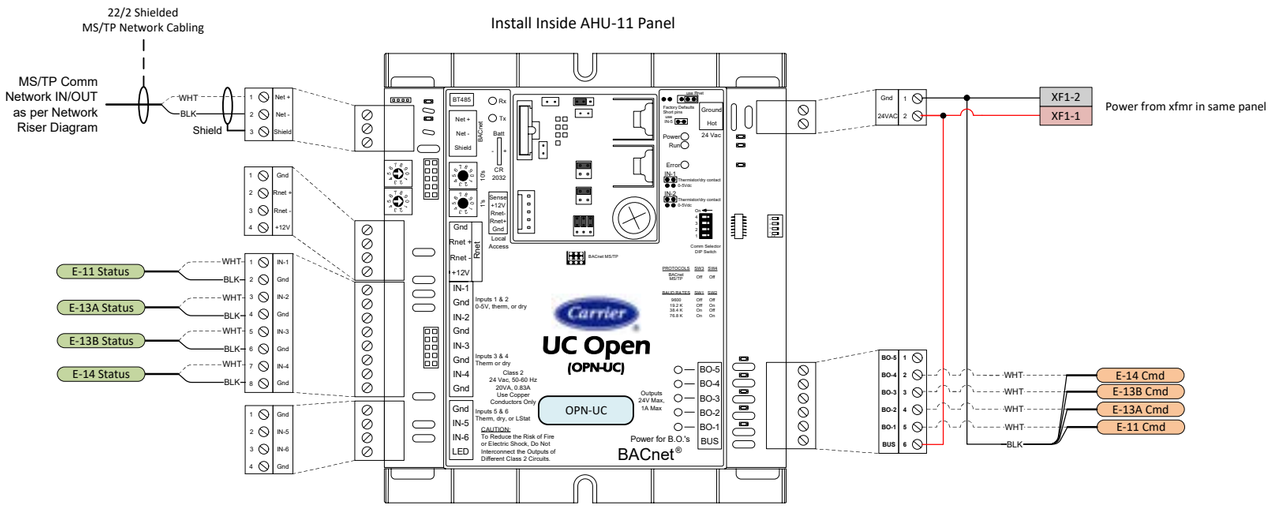


### Exhaust Fans E-11,13A,13B,14

SEQUENCE - FAN SOFTWARE INTERLOCKED WITH AHU:

A. FAN SHALL START/STOP IN PARALLEL WITH THE OCCUPIED MODE OF THE ASSOCIATED AHU (OR RTU).

B. FAN SHALL NOT BE ENERGIZED DURING AHU/RTU MORNING START-UP.

C. FAN SHALL BE INDICATED ON THE GRAPHIC FOR THE APPLICABLE AHU/RTU.

D. DDC POINT SCHEDULE:

FAN START/STOP 1 EACH DO FAN STATUS 1 EACH DI

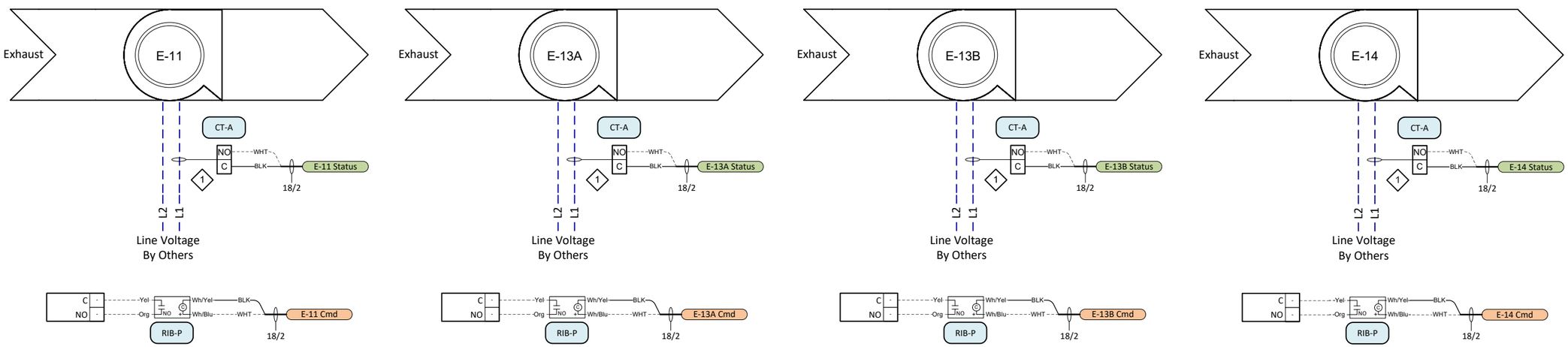


| Key Drawing Notes: | |
|---|---|
| 1 | Remove jumper wire and replace with wiring as shown. Refer to manufacturer provided installation instructions for specific terminations |
| 2 | Install current switch around incoming power leg |
| 3 | Set thermostat per sequence |
| 4 | Wiring specification unknown at time of submission, confirm required terminations and wire specifications with Kiln shunt equipment |

General Notes:
1. Refer to Network Diagram and Cable Specification Chart for wiring details and control module address.
2. Coordinate with Electrical Contractor (Div. 26) to provide 120 VAC circuit power to control panels.
3. Refer to Carrier Technical Documentation for specifications on control module setup, wiring, and driver configuration

E-11,13A,13B,14 (T13)
Control Type 13
DWG # 8.6
JOB # VWPW

NISD Village at West Pointe West ES
San Antonio, TX

| REV # | DESCRIPTION | DATE |
|---|---|---|
| 1 | Revision 1 | 8/14/2023 |
| 0 | SUBMITTED | 4/28/2023 |

Drawn:
ENG: Dennis Schnellman


Yates Co
4738 Whirlwind Dr.
San Antonio, TX 78217
Phone: 2107023820

# NISD Village at West Pointe West ES
# VWPW

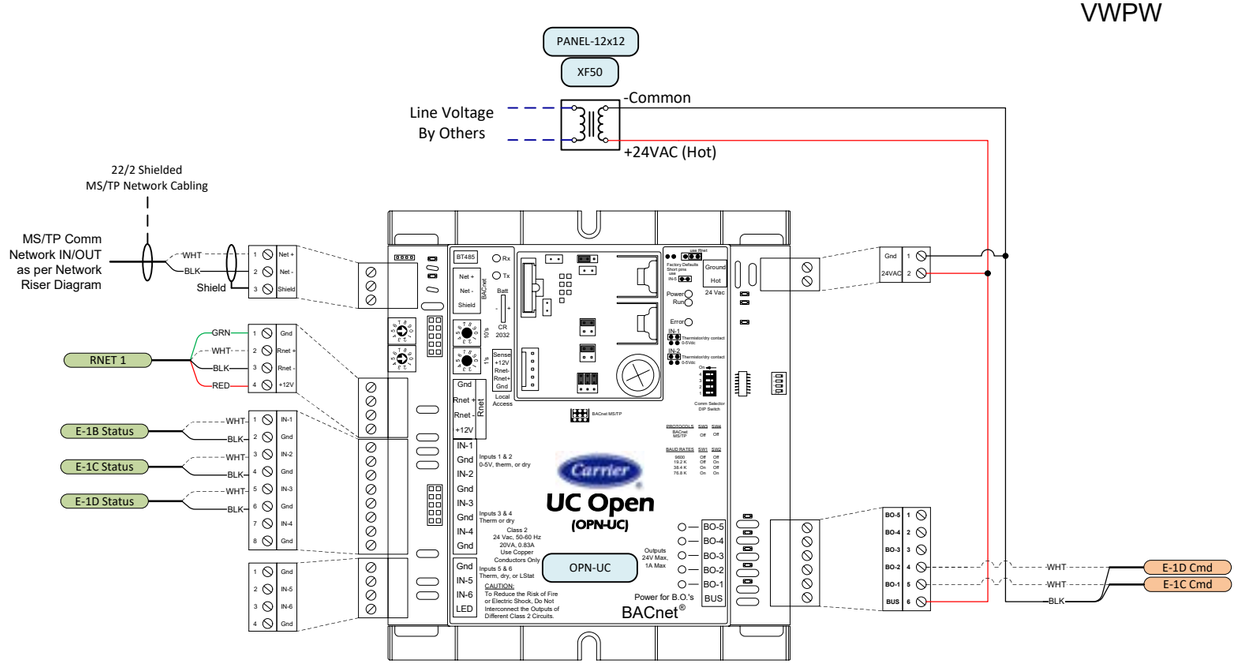


## Bill of Materials

| DID | Quantity | Part # | Manufacturer | Description |
|---|---|---|---|---|
| CT-A | 3 | A/MSCS-A | ACI | Current Switch, Split Core, NO, 0 to 150A Range, Adj. Trip Point |
| OPN-UC | 1 | OPN-UC | Carrier | Prog. Controller (5 BO, 6 UI), 5 Equipment |
| W-T | 1 | ET9SRTS | Columbus Electric | Wall Thermostat, 120-277 VAC, 50-90°F |
| RIB-P | 2 | RIB2401B | Functional Devices | Enclosed Relay 20 Amp SPDT, 10-30 VAC/VDC or 120 VAC Coil |
| XF50 | 1 | TR50VA015 | Functional Devices | Control Transformer (120/208/240/277/480 VAC Input - 24 VAC Output |
| PANEL-12x12 | 1 | AHE12X12X4 | Hoffman | Enclosure, Wall-mount, Hinged, Steel, NEMA1, 12"x12"x4" |

## Active Points List

| Point Number | Point Type | Point Name | Setup |
|---|---|---|---|
| IN-1 | DI | E-1B Status | DC |
| IN-2 | DI | E-1C Status | DC |
| IN-3 | DI | E-1D Status | DC |
| BO-1 | DO | E-1C Cmd | Relay |
| BO-2 | DO | E-1D Cmd | Relay |
| RNET | AI | Zone Temp(s) | RNET |

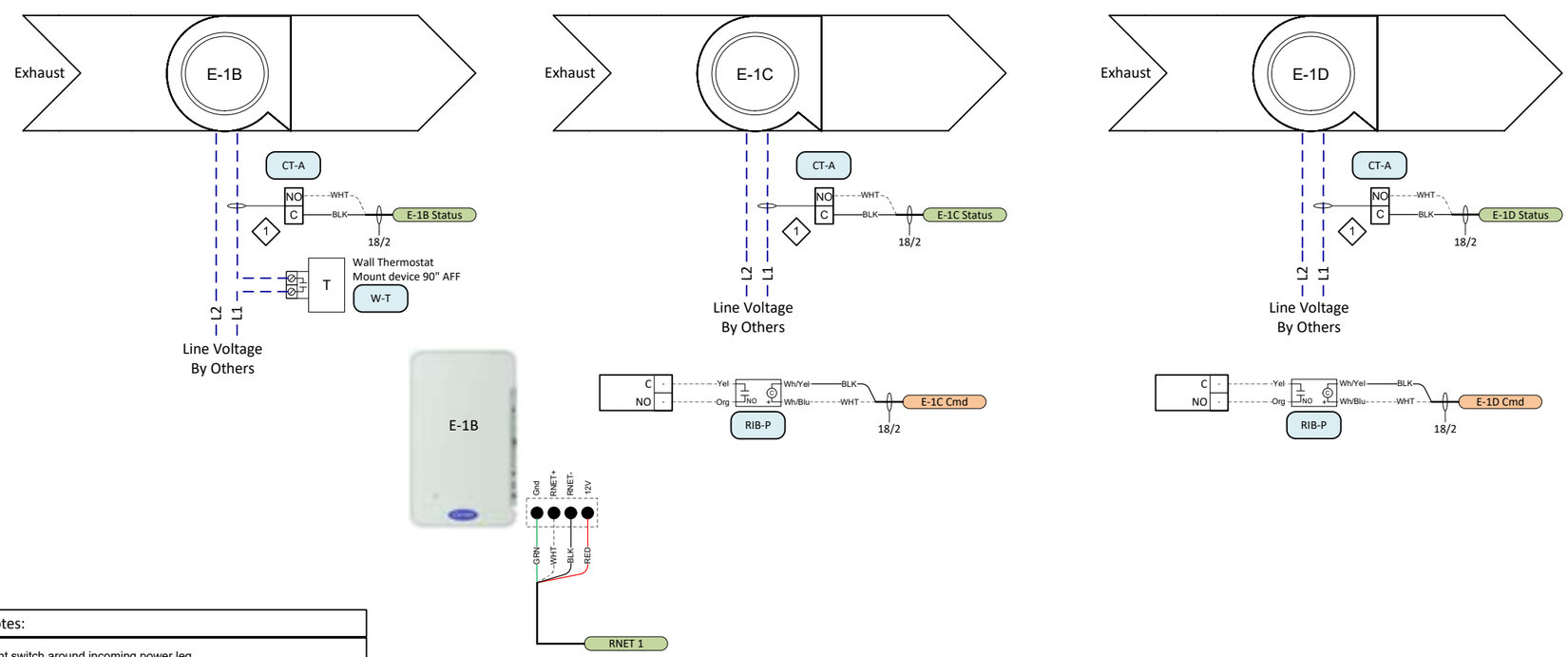


| Key Drawing Notes: | |
|---|---|
| 1 | Install current switch around incoming power leg |

General Notes:
1. Refer to Network Diagram and Cable Specification Chart for wiring details and control module address.
2. Coordinate with Electrical Contractor (Div. 26) to provide 120 VAC circuit power to control panels.
3. Refer to Carrier Technical Documentation for specifications on control module setup, wiring, and driver configuration

## E-1B

**SEQUENCE - FAN CONTROLLED BY LOCAL THERMOSTAT:**

A. SEE FAN SCHEDULE FOR FANS WITH THIS CONTROL TYPE.

B. THE FAN SHALL BE CONTROLLED BY A NON-EMS THERMOSTAT. FAN SHALL BE ENABLED AT ALL TIMES, AND SHALL START/STOP TO MAINTAIN THE SPACE SETPOINT OF *100F DEGREES. THE SPACE TEMPERATURE SHALL ALSO BE MONITORED BY AN EMS SENSOR. THE EMS SENSOR SHALL ALARM AT TEMPERATURES ABOVE 105F DEGREES.

C. DDC POINT SCHEDULE:

| | |
|---|---|
| FAN STATUS | 1 EA DI |
| SPACE TEMPERATURE | 1 EA AI |
| SPACE ALARM | 1 EA DO |

## E-1C & E-1D

**SEQUENCE - FAN SOFTWARE INTERLOCKED WITH AHU:**

A. FAN SHALL START/STOP IN PARALLEL WITH THE OCCUPIED MODE OF THE ASSOCIATED AHU (OR RTU).

B. FAN SHALL NOT BE ENERGIZED DURING AHU/RTU MORNING START-UP.

C. FAN SHALL BE INDICATED ON THE GRAPHIC FOR THE APPLICABLE AHU/RTU.

D. DDC POINT SCHEDULE:

FAN START/STOP 1 EACH DO FAN STATUS 1 EACH DI

| MARK | SERVES | CONTROL POINTS AND INTERLOCKS |
|---|---|---|
| E-1D | KITCHEN EXH. | FAN SHALL BE INTERLOCKED TO OPERATE WITH THE ZONE AHU (AH-1). ANYTIME THE KITCHEN HOOD EXHAUST FAN (E-1A) IS ENERGIZED THIS FAN SHALL DE-ENERGIZE. |

E-1B,1C,1D (T13,16,30)
Control Type 13,16,30

DWG # 8.7

JOB # VWPW

NISD Village at West Pointe West ES

San Antonio, TX

Drawn:
ENG: Dennis Schnellman

| REV # | DESCRIPTION | DATE |
|---|---|---|
| 1 | Revision 1 | 8/14/2023 |
| 0 | SUBMITTED | 4/28/2023 |


Yates Co
4738 Whirlwind Dr.
San Antonio, TX 78217
Phone: 2107023820

NISD Village at West Pointe West ES
VWPW

## Bill of Materials

| DID | Quantity | Part # | Manufacturer | Description |
|---|---|---|---|---|
| CT-A | 2 | A/MSCS-A | ACI | Current Switch, Split Core, NO, 0 to 150A Range, Adj. Trip Point |
| ZS2-CAR | 1 | ZS2-CAR | Carrier | ZS Standard; Carrier brand space temp sensor |
| ZS2-H-CAR | 1 | ZS2-H-CAR | Carrier | ZS Standard with Humidity; Carrier brand space temp sensor |
| RIB-P | 2 | RIB2401B | Functional Devices | Enclosed Relay 20 Amp SPDT, 10-30 VAC/VDC or 120 VAC Coil |

### Exhaust Fan E-15

**SEQUENCE - FAN CONTROLLED BY LOCAL SENSOR:**

A. SEE FAN SCHEDULE FOR FANS WITH THIS CONTROL TYPE.

B. THE FAN SHALL BE CONTROLLED BY A EMS SENSOR. FAN SHALL START/STOP TO MAINTAIN THE SPACE SETPOINT OF *80F DEGREES.

C. SPACE SHALL ALARM WITH SPACE TEMPERATURE ABOVE *90F OR IF FAN IS CALLED ON AND STATUS IS OFF.

D. DDC POINT SCHEDULE:

| | | | |
|---|---|---|---|
| FAN START/STOP | 1 EA DO | SPACE TEMPERATURE | 1 EA AI |
| FAN STATUS | 1 EA DI | SPACE ALARM | 1 EA DO |

### Exhaust Fan E-17

**SEQUENCE - UNDERFLOOR VENTILATION:**

A. PROVIDE UNDERFLOOR TEMPERATURE AND HUMIDITY SENSORS (EACH ISOLATED UNDERFLOOR AREA). SEE FAN SCHEDULE FOR FANS WITH THIS CONTROL TYPE.

B. VENTILATION:
1. VENTILATION FANS SHALL ATTEMPT TO MAINTAIN UNDERFLOOR TEMPERATURE BELOW *80F DEGREES, UNDERFLOOR TEMPERATURE ABOVE *65F DEGREES, AND UNDERFLOOR DEW POINT BELOW *70F DEGREES.
2. VENTILATION FANS SHALL OPERATE WHEN OUTSIDE AIR TEMPERTURE IS ABOVE *65F DEGREES, OUTSIDE AIR TEMPERATURE IS BELOW *80F DEGREES, AND OUTSIDE AIR DEW POINT IS BELOW *70F DEGREES.

C. ALARM: EMS SHALL ALARM ANYTIME ANY OF THE FOLLOWING OCCUR:
1. ANY FAN'S CT INDICATES A FAN FAILURE.
2. UNDERFLOOR DEW POINT EXCEEDS *72F DEGREES.
3. UNDERFLOOR TEMPERATURE IS BELOW *63F DEGREES.
4. UNDERFLOOR TEMPERATURE IS ABOVE *82F DEGREES.

D. DDC POINT SCHEDULE:

| | |
|---|---|
| FAN START/STOP | 1 EACH DO (EACH FAN) |
| FAN STATUS | 1 EACH DI (EACH FAN) |
| UF TEMPERATURE | 1 EACH AI (EACH UF AREA) |
| UF HUMIDITY | 1 EACH AI (EACH UF AREA) |

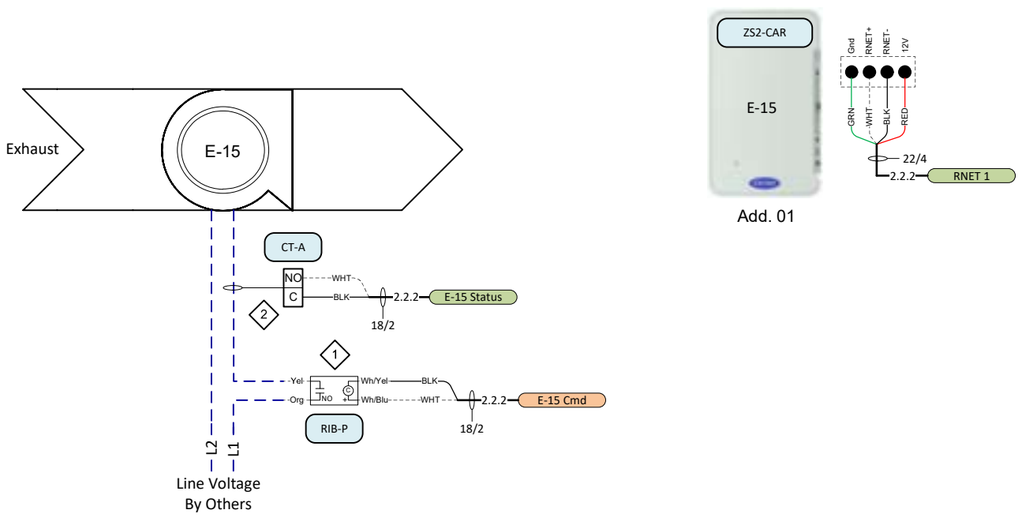


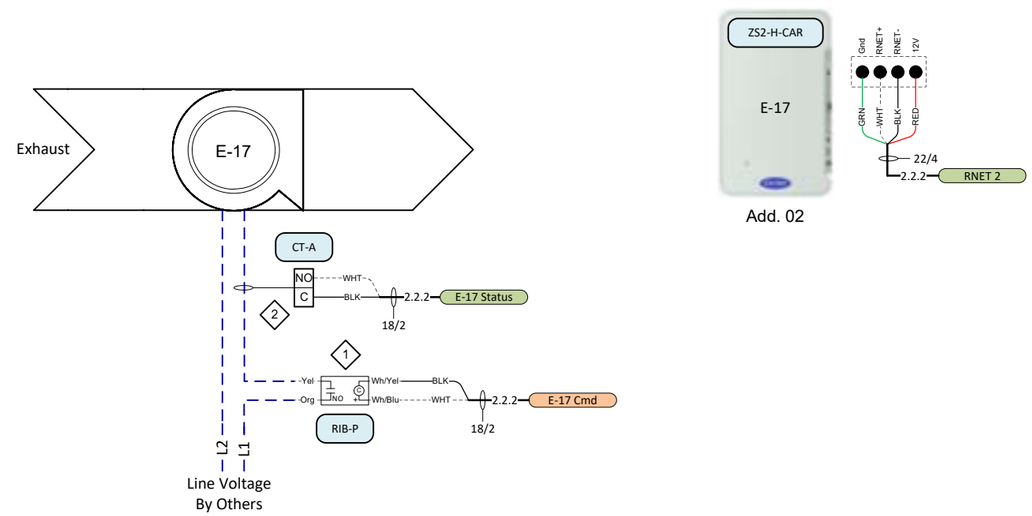


| Key Drawing Notes: | |
|---|---|
| 1 | Install current switch around incoming power leg |

General Notes:
1. Refer to Network Diagram and Cable Specification Chart for wiring details and control module address.
2. Coordinate with Electrical Contractor (Div. 26) to provide 120 VAC circuit power to control panels.
3. Refer to Carrier Technical Documentation for specifications on control module setup, wiring, and driver configuration

E-15,17 (T10,15)
Control Type 10,15
DWG # 8.8
JOB # VWPW

NISD Village at West Pointe West ES
San Antonio, TX

Drawn:
ENG: Dennis Schnellman

| REV # | DESCRIPTION | DATE |
|---|---|---|
| 1 | Revision 1 | 8/14/2023 |
| 0 | SUBMITTED | 4/28/2023 |


Yates Co
4738 Whirlwind Dr.
San Antonio, TX 78217
Phone: 2107023820

NISD Village at West Pointe West ES
VWPW

## Bill of Materials

| DID | Quantity | Part # | Manufacturer | Description |
|---|---|---|---|---|
| CT-A | 1 | A/MSCS-A | ACI | Current Switch, Split Core, NO, 0 to 150A Range, Adj. Trip Point |
| OPN-UC | 1 | OPN-UC | Carrier | Prog. Controller (5 BO, 6 UI), 5 Equipment |
| ZS2-CAR | 1 | ZS2-CAR | Carrier | ZS Standard; Carrier brand space temp sensor |
| RIB-P | 1 | RIB2401B | Functional Devices | Enclosed Relay 20 Amp SPDT, 10-30 VAC/VDC or 120 VAC Coil |

## Active Points List

| Point Number | Point Type | Point Name | Setup |
|---|---|---|---|
| IN-1 | DI | E-18 Status | DC |
| BO-1 | DO | E-18 Command | Relay |
| Rnet | Rnet | Zone Temp | Rnet |

### Exhaust Fan E-18

**SEQUENCE - FAN CONTROLLED BY LOCAL SENSOR:**

A. SEE FAN SCHEDULE FOR FANS WITH THIS CONTROL TYPE.

B. THE FAN SHALL BE CONTROLLED BY A EMS SENSOR. FAN SHALL START/STOP TO MAINTAIN THE SPACE SETPOINT OF *80F DEGREES.

C. SPACE SHALL ALARM WITH SPACE TEMPERATURE ABOVE *90F OR IF FAN IS CALLED ON AND STATUS IS OFF.

D. DDC POINT SCHEDULE:

| | | | |
|---|---|---|---|
| FAN START/STOP | 1 EA DO | SPACE TEMPERATURE | 1 EA AI |
| FAN STATUS | 1 EA DI | SPACE ALARM | 1 EA DO |

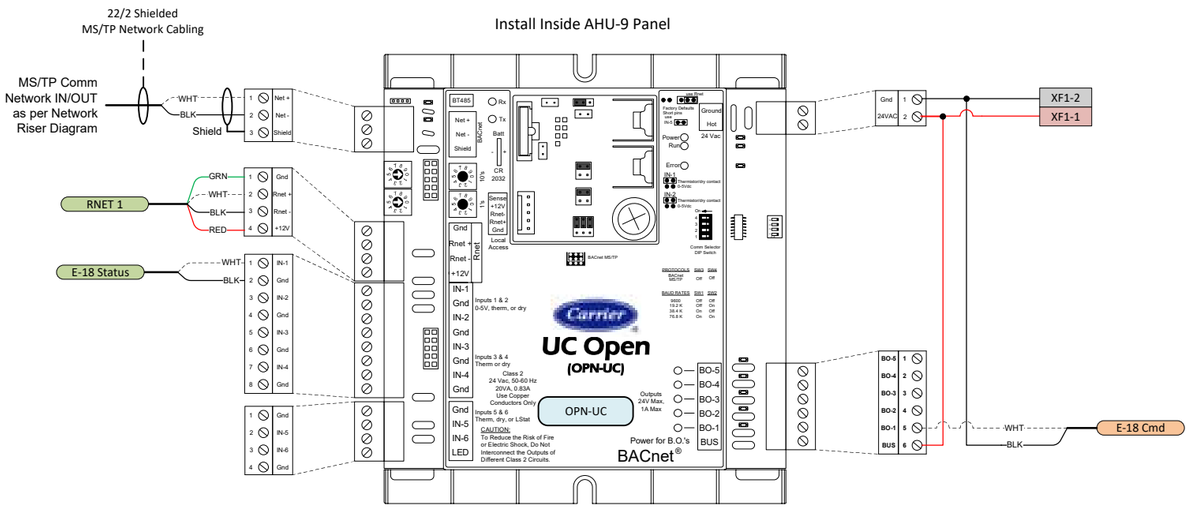


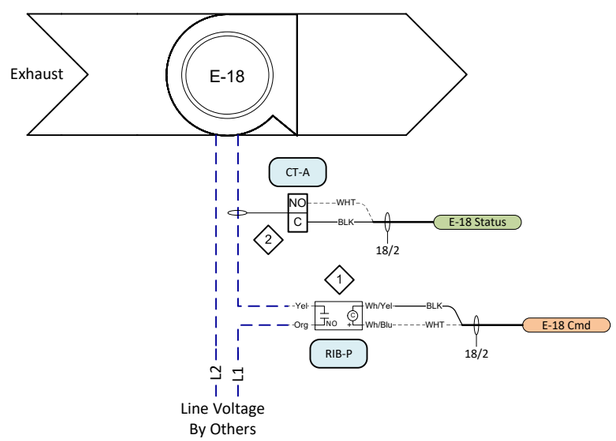


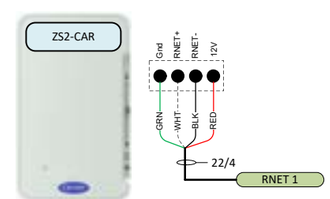


| Key Drawing Notes: | |
|---|---|
| 1 | Install current switch around incoming power leg |

General Notes:
1. Refer to Network Diagram and Cable Specification Chart for wiring details and control module address.
2. Coordinate with Electrical Contractor (Div. 26) to provide 120 VAC circuit power to control panels.
3. Refer to Carrier Technical Documentation for specifications on control module setup, wiring, and driver configuration

E-18 (T15)
Control Type 15
DWG # 8.9
JOB # VWPW

NISD Village at West Pointe West ES
San Antonio, TX

| REV # | DESCRIPTION | DATE |
|---|---|---|
| 0 | SUBMITTED | 4/28/2023 |
| 1 | Revision 1 | 8/14/2023 |

Drawn:
ENG: Dennis Schnellman

Yates Co
4738 Whirlwind Dr.
San Antonio, TX 78217
Phone: 2107023820

# NISD Village at West Pointe West ES
# VWPW

## Bill of Materials

| DID | Quantity | Part # | Manufacturer | Description |
|---|---|---|---|---|
| CT-A | 3 | A/MSCS-A | ACI | Current Switch, Split Core, NO, 0 to 150A Range, Adj. Trip Point |
| VLV | 2 | See Valve Schedule | Belimo | Control Valve |
| ZS2-CAR | 1 | ZS2-CAR | Carrier | ZS Standard; Carrier brand space temp sensor |
| RIB-P | 1 | RIB2401B | Functional Devices | Enclosed Relay 20 Amp SPDT, 10-30 VAC/VDC or 120 VAC Coil |
| RIB | 2 | RIBU1C | Functional Devices | Enclosed Relay 10 Amp SPDT, 10-30 VAC/VDC or 120 VAC Coil |

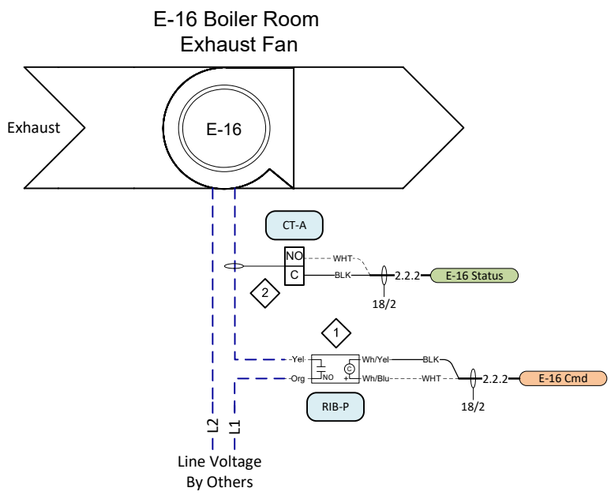


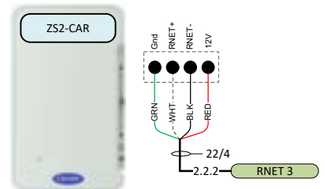


Add. 03

**SEQUENCE - BOILER ROOM HEATING AND VENTILATION:**

A. PROVIDE THIS CONTROL FOR CENTRAL PLANT EQUIPMENT: VENTILATION EXHAUST FANS AND UNIT HEATERS IN BOILER ROOM.

B. OPERATIONAL SEQUENCE:

1. IF NO CALL FOR HEATING OR COOLING:
   a) VENTILATION FAN SHALL DE-ENERGIZE.
   b) UNIT HEATER FAN SHALL DE-ENERGIZE.
   c) UNIT HEATER HOT WATER VALVE SHALL FULL CLOSE.

2. IF SPACE CALLS FOR HEATING (SPACE TEMPERATURE BELOW *45F DEGREES):
   a) VENTILATION FAN SHALL DE-ENERGIZE.
   b) SIGNAL CENTRAL PLANT FOR HEATING.
   c) UNIT HEATER HOT WATER VALVE SHALL FULL OPEN.
   d) UNIT HEATER FAN SHALL ENERGIZE.

3. IF SPACE CALLS FOR COOLING (SPACE TEMPERATURE ABOVE *80F DEGREES):
   a) VENTILATION FAN SHALL ENERGIZE.
   b) UNIT HEATER FAN SHALL DE-ENERGIZE.
   c) UNIT HEATER HOT WATER VALVE SHALL FULL CLOSE.

C. DDC POINT SCHEDULE:

| | | | |
|---|---|---|---|
| SPACE TEMPERATURE | 1 EACH AI | UH START/STOP | 1 EACH DO (PER UH) |
| VENT FAN START/STOP | 1 EACH DO | UH STATUS | 1 EACH DI (PER UH) |
| VENT FAN STATUS | 1 EACH DI | UH HW VALVE | 1 EACH DO (PER UH) |

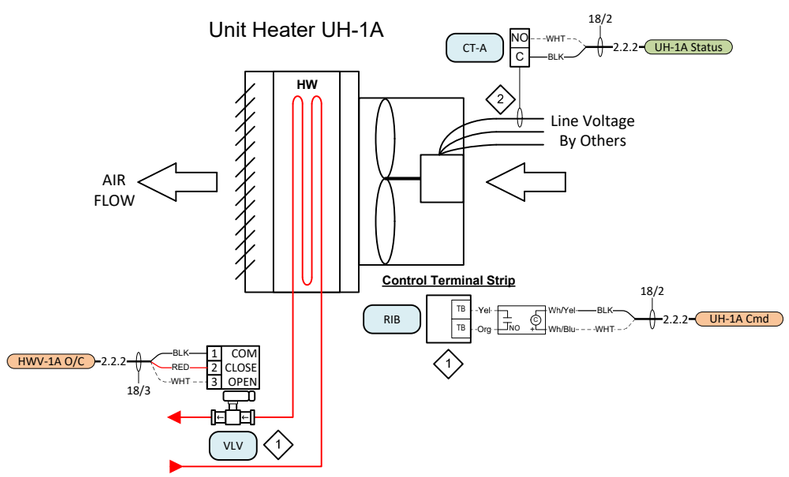


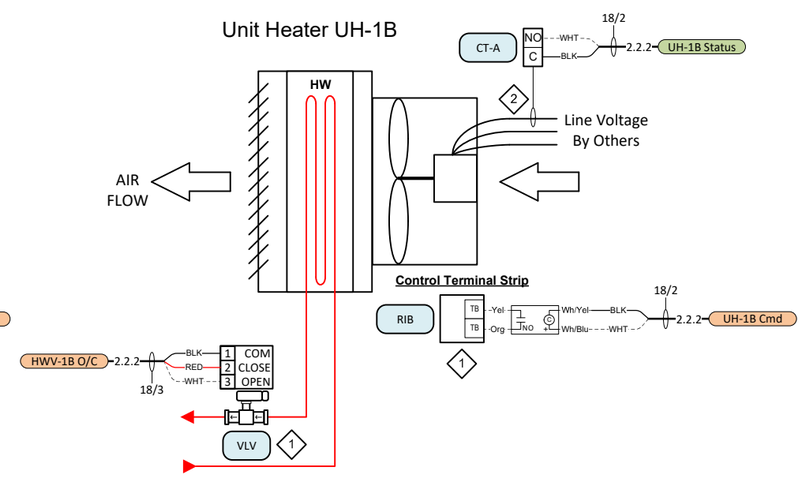


| Key Drawing Notes: | |
|---|---|
| 1 | Refer to manufacturer provided installation instructions or existing installation for specific terminations. Verify proper wiring. |
| 2 | Install current switch around incoming power leg |

General Notes:
1. Refer to Network Diagram and Cable Specification Chart for wiring details and control module address.
2. Coordinate with Electrical Contractor (Div. 26) to provide 120 VAC circuit power to control panels.
3. Refer to Carrier Technical Documentation for specifications on control module setup, wiring, and driver configuration

Boiler Rm HVAC (T17)
Control Type 17
DWG # 8.10
JOB # VWPW

NISD Village at West Pointe West ES
San Antonio, TX

| REV # | DESCRIPTION | DATE |
|---|---|---|
| 1 | Revision 1 | 8/14/2023 |
| 0 | SUBMITTED | 4/28/2023 |

Drawn:
ENG: Dennis Schnellman


Yates Co
4738 Whirlwind Dr.
San Antonio, TX 78217
Phone: 2107023820

# NISD Village at West Pointe West ES
# VWPW

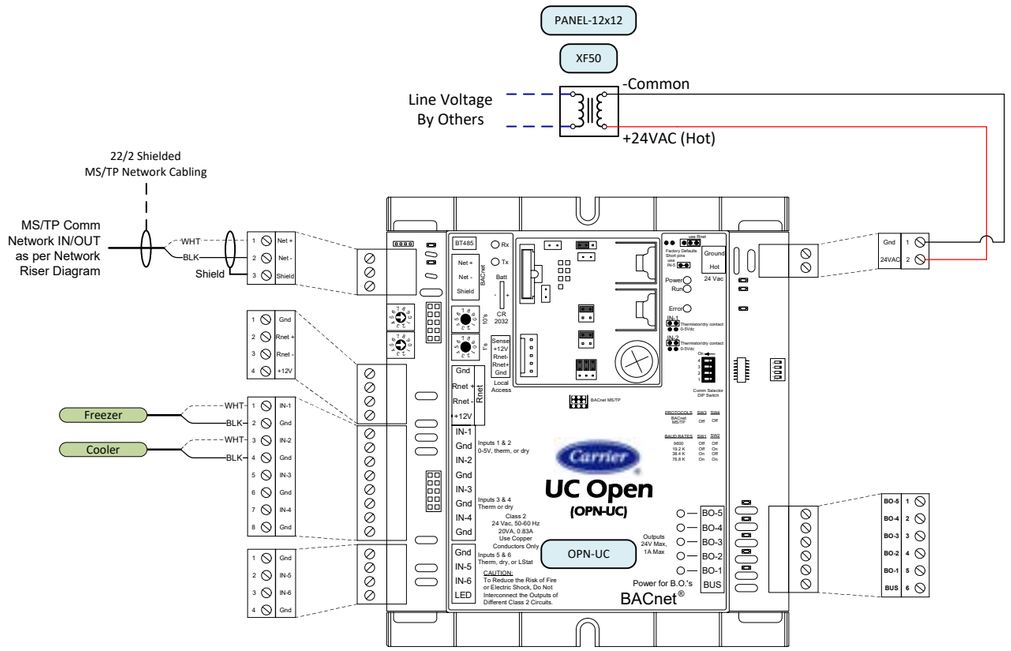

## Bill of Materials

| DID | Quantity | Part # | Manufacturer | Description |
|---|---|---|---|---|
| OPN-UC | 1 | OPN-UC | Carrier | Prog. Controller (5 BO, 6 UI), 5 Equipment |
| TB-2 | 2 | BA/10K-2-TB-M304-2-HB-NB-10 | BAPI | 2" Thermobuffer; 10K-2 Thermistor; Hanging bracket |
| XF50 | 1 | TR50VA015 | Functional Devices | Control Transformer (120/208/240/277/480 VAC Input - 24 VAC Output |
| PANEL-12x12 | 1 | AHE12X12X4 | Hoffman | Enclosure, Wall-mount, Hinged, Steel, NEMA1, 12"x12"x4" |

## Active Points List

| Point Number | Point Type | Point Name | Setup |
|---|---|---|---|
| IN-1 | AI | Freezer Temp | Therm |
| IN-2 | AI | Cooler Temp | Therm |

**SEQUENCE - COOLER/FREEZER TEMPERATURE MONITOR**

A. THE EMS SHALL MONITOR THE TEMPERATURE OF THE WALK-IN COOLER AND THE WALK-IN FREEZER, AND SHALL ALARM IF THE TEMPERATURE REMAINS ABOVE THE ALARM SETPOINT IN EXCESS OF *2 HOURS.

EMS SYSTEM SHALL NOTIFY DESIGNATED NISD PERSONNEL VIA TEXT MESSAGE AND/OR EMAIL UPON AN ALARM CONDITION. COORDINATE LIST OF DESIGNATED PERSONNEL AND NOTIFICATION PREFERENCES WITH NISD.

B. COOLER ALARM SETPOINT: *44F DEGREES.
FREEZER ALARM SETPOINT: *18F DEGREES.

C. DDC POINTS SCHEDULE:

WALK-IN COOLER TEMPERATURE 1 EACH AI
WALK-IN FREEZER TEMPERATURE 1 EACH AI

General Notes:
1. Refer to Network Diagram and Cable Specification Chart for wiring details and control module address.
2. Coordinate with Electrical Contractor (Div. 26) to provide 120 VAC circuit power to control panels.
3. Refer to Carrier Technical Documentation for specifications on control module setup, wiring, and driver configuration

Freezer/Cooler (T31)
Control Type 31
DWG # 8.11
JOB # VWPW

NISD Village at West Pointe West ES
San Antonio, TX

| REV # | DESCRIPTION | DATE |
|---|---|---|
| 1 | Revision 1 | 8/14/2023 |
| 0 | SUBMITTED | 4/28/2023 |

Drawn:
ENG: Dennis Schnellman

Yates Co
4738 Whirlwind Dr.
San Antonio, TX 78217
Phone: 2107023820

# NISD Village at West Pointe West ES
# VWPW

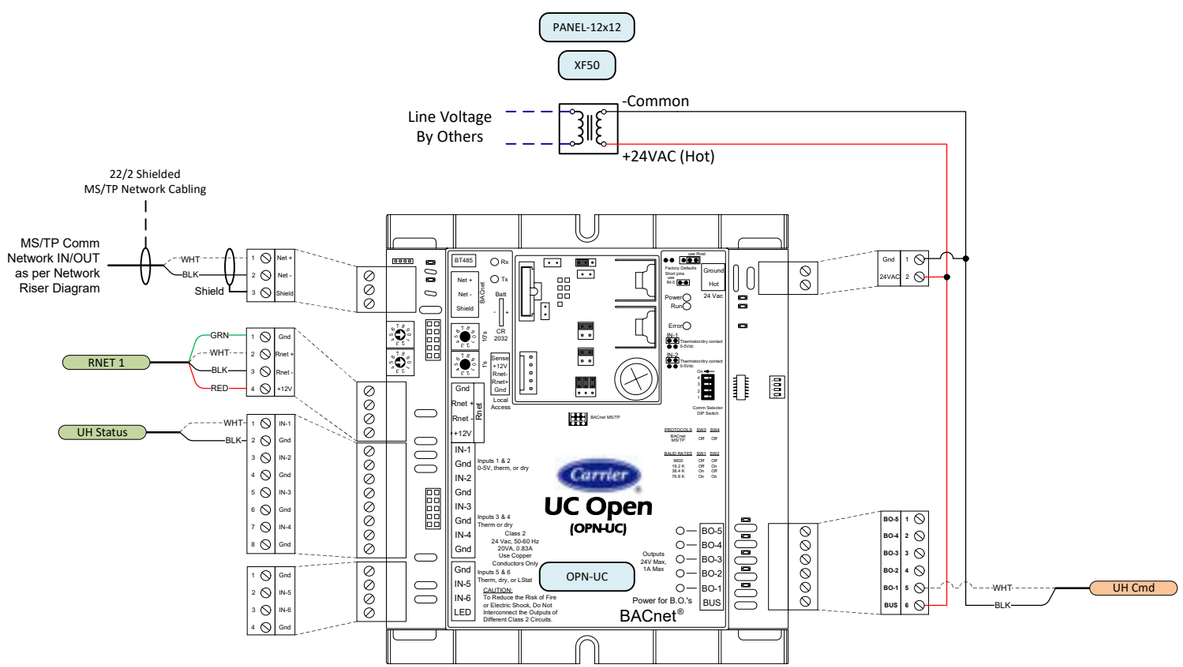


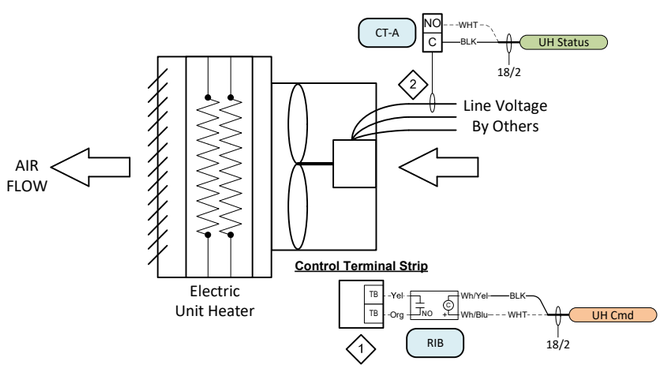


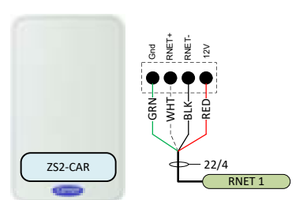


| Key Drawing Notes: | |
|---|---|
| 1 | Refer to manufacturer provided installation instructions for specific terminations |
| 2 | Install current switch around 1 incoming power leg |

General Notes:
1. Refer to Network Diagram and Cable Specification Chart for wiring details and control module address.
2. Coordinate with Electrical Contractor (Div. 26) to provide 120 VAC circuit power to control panels.
3. Refer to Carrier Technical Documentation for specifications on control module setup, wiring, and driver configuration
4. Install space sensors 48" above fixed floor (A.F.F.)

## Bill of Materials

| DID | Quantity | Part # | Manufacturer | Description |
|---|---|---|---|---|
| CT-A | 1 | A/MSCS-A | ACI | Current Switch, Split Core, NO, 0 to 150A Range, Adj. Trip Point |
| OPN-UC | 1 | OPN-UC | Carrier | Prog. Controller (5 BO, 6 UI), 5 Equipment |
| ZS2-CAR | 1 | ZS2-CAR | Carrier | ZS Standard; Carrier brand space temp sensor |
| RIB | 1 | RIBU1C | Functional Devices | Enclosed Relay 10 Amp SPDT, 10-30 VAC/VDC or 120 VAC Coil |
| XF50 | 1 | TR50VA015 | Functional Devices | Control Transformer (120/208/240/277/480 VAC Input - 24 VAC Output |
| PANEL-12x12 | 1 | AHE12X12X4 | Hoffman | Enclosure, Wall-mount, Hinged, Steel, NEMA1, 12"x12"x4" |

## Active Points List

| Point Number | Point Type | Point Name | Setup |
|---|---|---|---|
| IN-1 | DI | UH Status | DC |
| BO-1 | DO | UH Cmd | Relay |
| RNET | AI | Zone Temp | RNET |

**SEQUENCE - FIRE SPRINKLER RISER ROOM HEATING:**

A. PROVIDE THIS CONTROL FOR FIRE SPRINKLER RISER ROOM EQUIPMENT UH-XX.

B. OPERATIONAL SEQUENCE: IF SPACE TEMPERATURE IS BELOW *60F DEGREES, THE ELECTRIC UNIT HEATER SHALL START AND OPERATE UNDER ITS FACTORY CONTROLS.

C. DDC POINTS SCHEDULE:

UNIT HEATER START/STOP 1 EACH DO
ELEC COIL STATUS 1 EACH DI

Fire Riser Unit Heater (T22)
Control Type 22
DWG # 8.12
JOB # VWPW

NISD Village at West Pointe West ES
San Antonio, TX

Drawn:
ENG: Dennis Schnellman

| REV # | DATE | DESCRIPTION |
|---|---|---|
| 1 | 8/14/2023 | Revision 1 |
| 0 | 4/28/2023 | SUBMITTED |


Yates Co
4738 Whirlwind Dr.
San Antonio, TX 78217
Phone: 2107023820

# NISD Village at West Pointe West ES
# VWPW

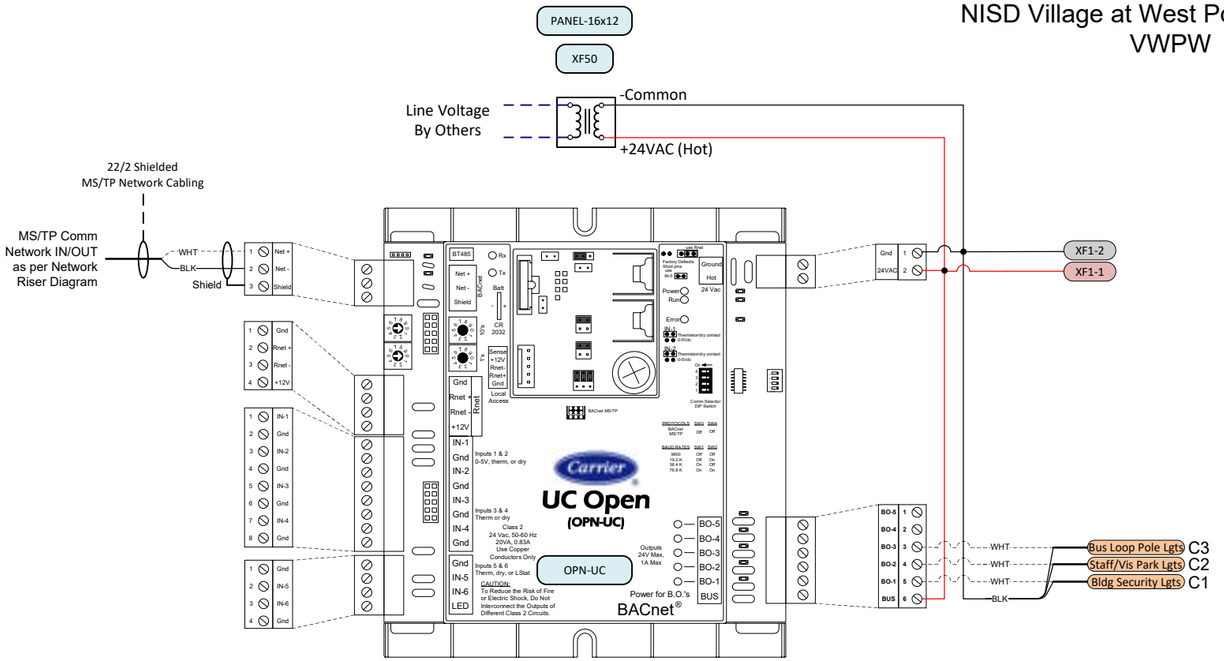


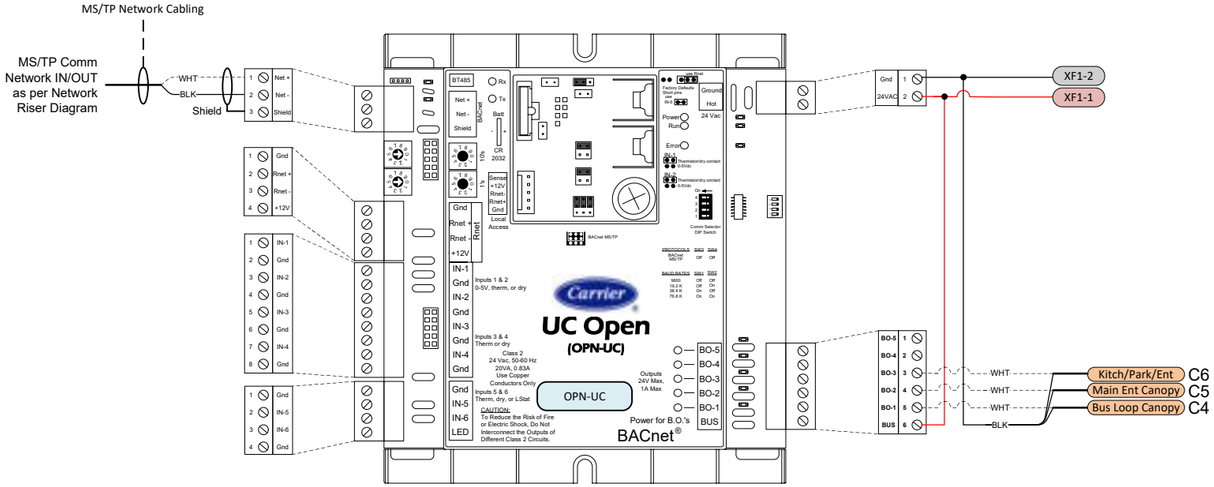


## Bill of Materials

| DID | Quantity | Part # | Manufacturer | Description |
|---|---|---|---|---|
| OPN-UC | 2 | OPN-UC | Carrier | Prog. Controller (5 BO, 6 UI), 5 Equipment |
| RIB | 6 | RIBU1C | Functional Devices | Enclosed Relay 10 Amp SPDT, 10-30 VAC/VDC or 120 VAC Coil |
| XF50 | 1 | TR50VA015 | Functional Devices | Control Transformer (120/208/240/277/480 VAC Input - 24 VAC Output |
| PANEL-16x12 | 1 | AHE16X12X4 | Hoffman | Enclosure, Wall-mount, Hinged, Steel, NEMA1, 16"x12"x4" |

## Active Points List

| Point Number | Point Type | Point Name | Setup |
|---|---|---|---|
| BO-1 | BO | Bldg Security Lights | Relay |
| BO-2 | BO | Staff/Visitor Lights | Relay |
| BO-3 | BO | Bus Loop Pole Lights | Relay |

## Active Points List

| Point Number | Point Type | Point Name | Setup |
|---|---|---|---|
| BO-1 | BO | Bus Loop Canopy Lights | Relay |
| BO-2 | BO | Main Entrance Lights | Relay |
| BO-3 | BO | Kitch/Park/Ent Lights | Relay |

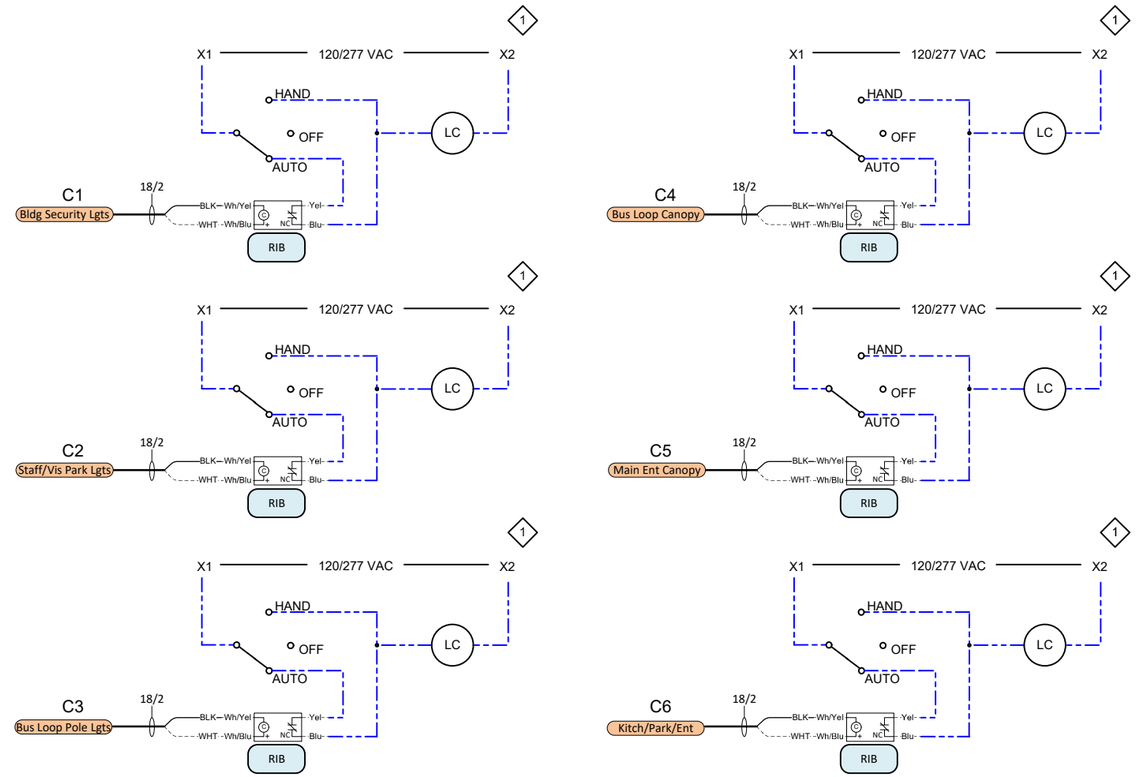


| Key Drawing Notes: | |
|---|---|
| 1 | Refer to electrical drawing set for more details. Contactors located in Elec Rm E106. |

General Notes:
1. Refer to Network Diagram and Cable Specification Chart for wiring details and control module address.
2. Coordinate with Electrical Contractor (Div. 26) to provide 120 VAC circuit power to control panels.
3. Refer to Carrier Technical Documentation for specifications on control module setup, wiring, and driver configuration

**SEQUENCE - EXTERIOR LIGHTING CONTROLS:**

A. SECURITY LIGHTING, PARKING LOT LIGHTING, AND EVENT LIGHTING SHALL BE INDIVIDUALLY CONTROLLED BY EMS (TIME OF DAY PROGRAM) SCHEDULE. NO PHOTOCELLS.

1. ALL SECURITY LIGHTING SHALL BE ON ONE SCHEDULE POINT.
2. PARKING LOT LIGHTING SHALL BE SCHEDULED BY PARKING LOT.
3. ALL EVENT LIGHTING SHALL BE ON ONE SCHEDULE POINT.
4. EXCEPTIONS: LIGHTS AT CAFETERIA REAR ENTRANCE SHALL BE A SEPARATE SCHEDULE.
5. OUTDOOR CEILING FANS (AS APPLICABLE) SHALL BE START/STOPPED BY CONTACTOR (BY TIME OF DAY PROGRAM). THRU THE EMS, THE FANS SHALL ALSO BE OFF ANY TIME THE AMBIENT TERMERATURE IS BELOW *80F DEGREES.

B. PROVIDE ONE LOCAL OVERRIDE BUTTON IN THE MAIN OVERRIDE PANEL TO ENERGIZE ALL SECURITY, PARKING LOT, AND EVENT LIGHTING (FOR MAINTENANCE USE).

C. EMS (TIME OF DAY PROGRAM) SHALL COMPENSATE FOR SEASON AND DAYLIGHT SAVING TIME TO ENERGIZE LIGHTS AT DUSK AND DE-ENERGIZE LIGHTS AT DAWN, UNLESS OTHERWISE SCHEDULED.

D. DDC POINT SCHEDULE: CONTACTOR START/STOP 1 EA DO

Exterior Lighting (T25)
Control Type 25

DWG # 8.13

JOB # VWPW

NISD Village at West Pointe West ES

San Antonio, TX

Drawn:
ENG: Dennis Schnellman

| REV # | DATE | DESCRIPTION |
|---|---|---|
| 1 | 8/14/2023 | Revision 1 |
| 0 | 4/28/2023 | SUBMITTED |


Yates Co
4738 Whirlwind Dr.
San Antonio, TX 78217
Phone: 2107023820

# NISD Village at West Pointe West ES
# VWPW

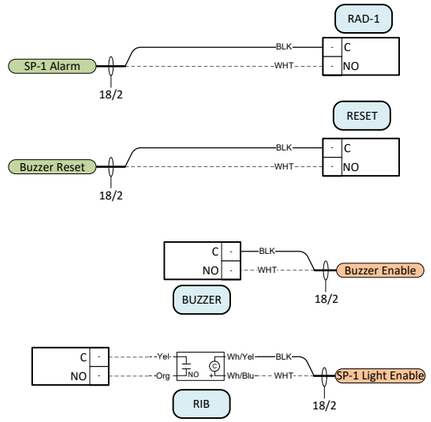


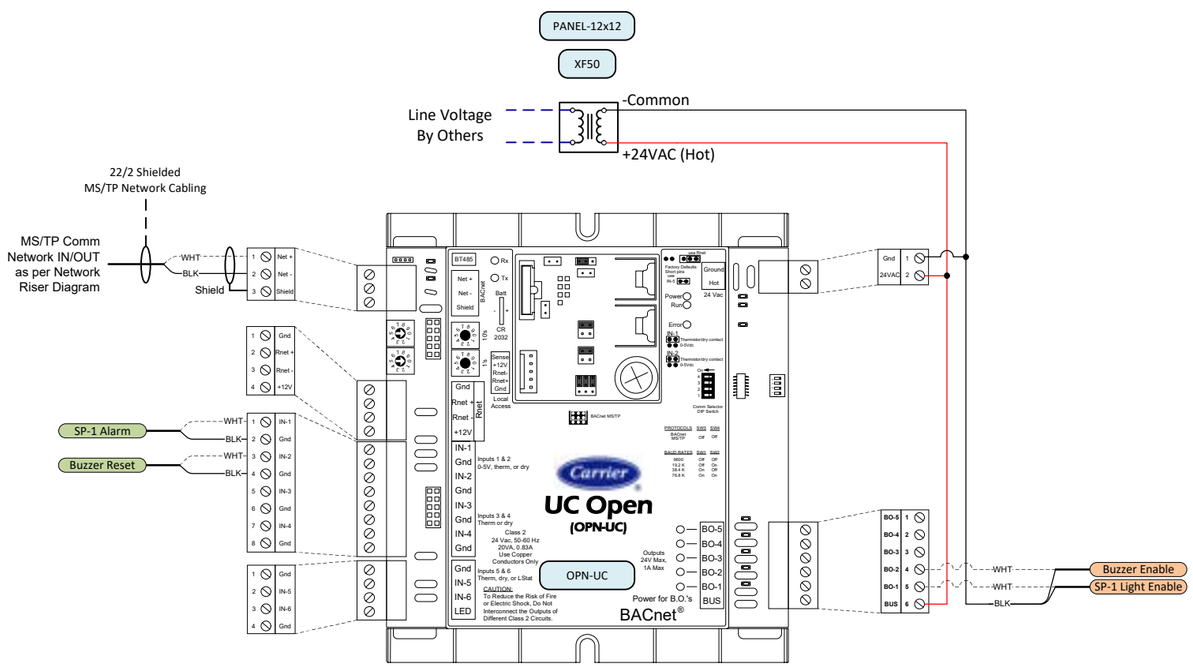


General Notes:
1. Refer to Network Diagram and Cable Specification Chart for wiring details and control module address.
2. Coordinate with Electrical Contractor (Div. 26) to provide 120 VAC circuit power to control panels.
3. Refer to Carrier Technical Documentation for specifications on control module setup, wiring, and driver configuration

## Bill of Materials

| DID | Quantity | Part # | Manufacturer | Description |
|---|---|---|---|---|
| OPN-UC | 1 | OPN-UC | Carrier | Prog. Controller (5 BO, 6 UI), 5 Equipment |
| RIB | 1 | RIBU1C | Functional Devices | Enclosed Relay 10 Amp SPDT, 10-30 VAC/VDC or 120 VAC Coil |
| XF50 | 1 | TR50VA015 | Functional Devices | Control Transformer (120/208/240/277/480 VAC Input - 24 VAC Output |
| PANEL-12x12 | 1 | AHE12X12X4 | Hoffman | Enclosure, Wall-mount, Hinged, Steel, NEMA1, 12"x12"x4" |
| RESET | 1 | AL6M-M1-B | IDEC | Pushbutton Reset |
| BUZZER | 1 | UZ6-12 | IDEC | Buzzer,Round,Sound Lvl 80db,Frequency 2kHz,24 VAC,Current 7mA,70mm,-4F to 131F |
| RAD-1 | 1 | RAD-1 | Kele | Remote Alarm Indication Station |

## Active Points List

| Point Number | Point Type | Point Name | Setup |
|---|---|---|---|
| IN-1 | DI | SP-1 Alarm | DC |
| IN-2 | DI | Buzzer Reset | DC |
| BO-1 | DO | SP-1 Light Enable | Relay |
| BO-2 | DO | Buzzer Enable | Relay |

**SEQUENCE - SUMP PUMP MONITORING:**

A. EACH SUMP PUMP SHALL OPERATE ON LOCAL, NON-EMS, FACTORY CONTROLS. MANUFACTURER'S SUMP PUMP CONTROL PANEL SHALL BE LOCATED NEAR THE SUMP PUMP AND SHALL INCLUDE A FLASHING ALARM LIGHT. IF THE FACTORY PANEL ALSO INCLUDES AN AUDIO ALARM (BUZZER), THE AUDIO ALARM SHALL BE PERMANENTLY DE-ACTIVATED. THE FACTORY ALARM LIGHT SHALL REMAIN ENERGIZED, UNTIL THE SUMP PUMP CONDITION CAUSING THE ALARM IS CORRECTED.

B. PROVIDE A REMOTE EMS SUMP PUMP ALARM PANEL LOCATED IN THE CUSTODIAN'S OFFICE. PANEL SHALL CONSIST OF A LIGHT AND BUZZER FOR EACH PUMP WITH A SILENCE BUTTON (FOR BUZZER). THE REMOTE ALARM LIGHT SHALL REMAIN ENERGIZED UNTIL THE SUMP PUMP CONDITION CAUSING THE ALARM IS CORRECTED. IF FACILITY INCLUDES MULTIPLE SUMP PUMPS, THE ALARMS FOR THE MULTIPLE PUMPS SHALL BE COMBINED INTO A SINGLE PANEL. EACH PUMP ALARM SHALL BE INDIVIDUALLY LABELED, AND SHALL INCLUDE PUMP MARK NUMBER AND LOCATION. A HIGH WATER LEVEL ALARM SHALL ALARM THE EMS.

C. DDC CONTROL SCHEDULE:

| | |
|---|---|
| HIGH WATER ALARM | 1 EACH DI PER PUMP |
| REMOTE ALARM | 1 EACH DO PER PUMP |

NOTE:
THIS CONTROL SEQUENCE SHALL APPLY TO THE ELEVATOR SUMP PUMP. PROVIDE CONTROL CONDUIT TO PUMP CONTROLLERS (WHERE APPLICABLE).

Sump Pump Alarm Panel (T26)
Control Type 26

DWG # 8.14
JOB # VWPW

NISD Village at West Pointe West ES
San Antonio, TX

Drawn:
ENG: Dennis Schnellman

| REV # | DESCRIPTION | DATE |
|---|---|---|
| 1 | Revision 1 | 8/14/2023 |
| 0 | SUBMITTED | 4/28/2023 |


Yates Co
4738 Whirlwind Dr.
San Antonio, TX 78217
Phone: 2107023820

NISD Village at West Pointe West ES
VWPW

Touchscreen panel and mounting hardware provided by the owner

The images on this page are representative of the style and methods to be implemented on this project. Final versions specific to this facility and layout will be available at a later time based on layout shown on the mechanical drawing set.

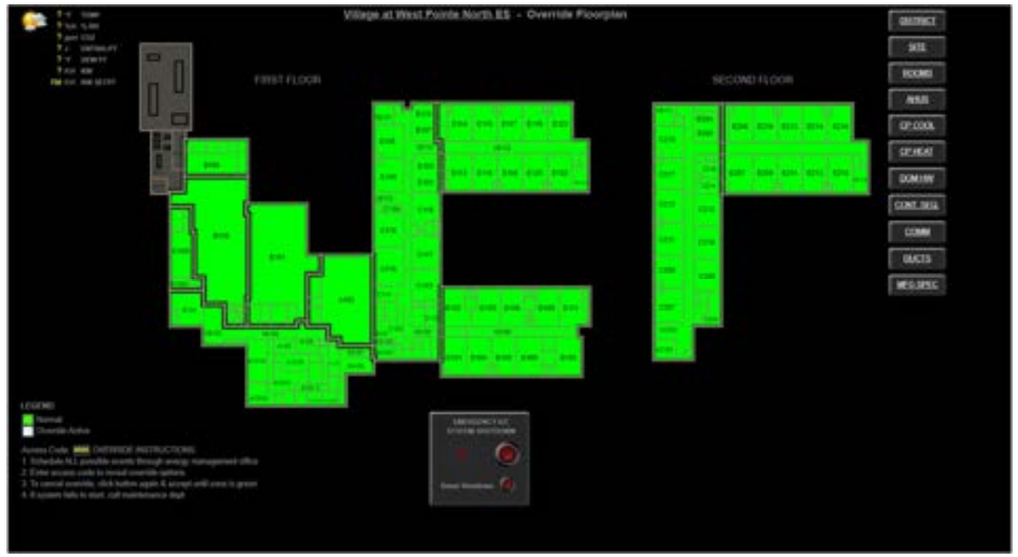


*Figure 1: Override floorplan graphic – Access Code not entered*

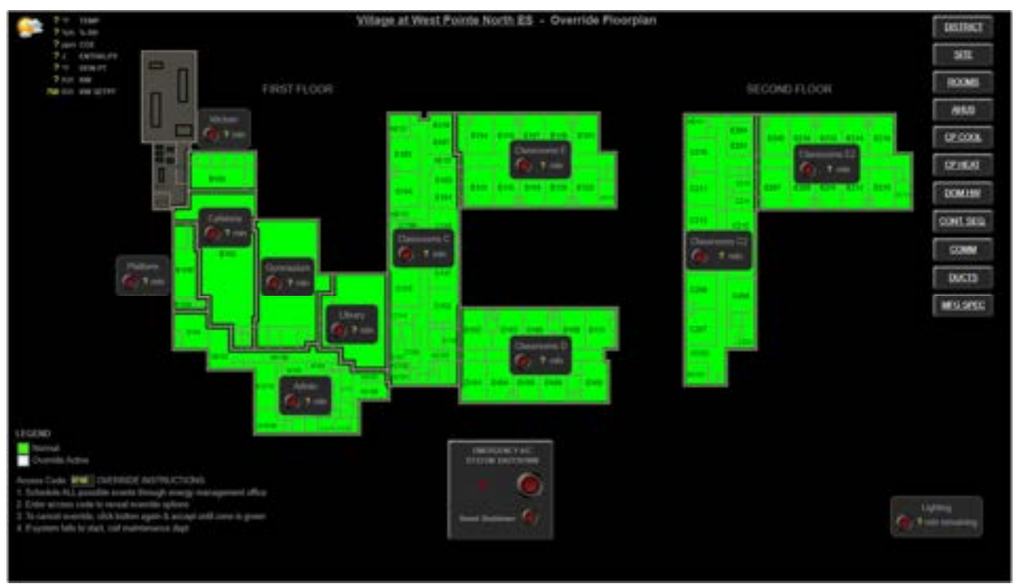


*Figure 2: Override floorplan graphic – Access Code entered*

**CAMPUS OVERRIDE CONTROL PANEL:**

A. INSTALL AND PROGRAM OWNER FURNISHED DIGITAL TOUCH SCREEN TYPE CAMPUS OVERRIDE CONTROL PANEL. THE PANEL SHALL INCLUDE ZONING, AS INDICATED HEREIN, AND SHALL INTERFACE WITH ALL HVAC EQUIPMENT ZONES.

B. THE CAMPUS OVERRIDE PANEL SHALL BE LOCATED IN THE ADMIN AREA. SEE MECHANICAL FLOOR PLAN FOR PANEL LOCATION.

C. THE CAMPUS OVERRIDE PANEL GRAPHIC REPRESENTATION SHALL BE AN AERIAL VIEW OF THE TOTAL CAMPUS WITH THE MAIN ENTRANCE AT THE BOTTOM OF THE GRAPHIC. EACH ZONE SHALL BE DISPALYED IN A DIFFERENT COLOR AND SHALL CONTAIN TOUCH PROGRAMMING TO ACTIVATE AND DE-ACTIVATE THE ZONE. OVERRIDE REQUESTS SHALL BE ACTIVATED ONLY BY USE OF AN AUTHORIZATION CODE. A SINGLE ACCESS CODE INPUT SHALL ALLOW THE OPERATOR 20 SECONDS TO ACTIVATE ZONE OVERRIDES. EACH TOUCH OF THE ZONE SHALL ACTIVATE THE ZONE FOR 60 MINUTES (180 MINUTES MAX). OVERRIDES SHALL BE CANCELED BY TOUCHING THE ZONE UNTIL THE INDICATOR GOES OFF. CANCELATION CAN BE ACCOMPLISHED WITHOUT USE OF THE ACCESS CODE.

D. THE CAMPUS OVERRIDE PANEL SHALL CONTAIN A COMMAND OVERRIDE TO ENERGIZE ALL EXTERIOR LIGHTING (FOR MAINTENANCE USE ONLY). THIS OVERRIDE SHALL BYPASS THE SUNSET / SUNRISE BLOCK. THE LIGHTING OVERRIDE OPERATION SHALL BE THE SAME AS OTHER OVERRIDES.

E. THE CAMPUS OVERRIDE PANEL SHALL CONTAIN AN EMERGENCY SHUTDOWN FUNCTION TO TERMINATE ALL AIR MOTION IN THE FACILITY. AUTHORIZED ACCESS SHALL NOT BE REQUIRED TO SHUT DOWN ALL A/C EQUIPMENT, BUT SHALL BE REQUIRED TO RESTART ALL AIR MOTION. INDICATE THE EMERGENCY SHUTDOWN FUNCTION IN A CLEAR AREA OF THE GRAPHIC, AND LABEL THE FUNCTION AS "EMERGENCY A/C SHUTDOWN".

F. THE CAMPUS OVERRIDE PANEL SHALL CONTAIN THESE OPERATIONAL INSTRUCTIONS:

"1. PLEASE SCHEDULE ALL EVENTS THROUGH ENERGY MANAGEMENT.

2. TO ACTIVATE OVERRIDE, TOUCH THE ZONE 1 TIME FOR 60 MINUTES, 2 TIMES FOR 120 MINUTES, OR 3 TIMES FOR 180 MINUTES (MAX).

3. TO CANCEL OVERRIDES, TOUCH THE ZONE UNTIL INDICATOR GOES OFF.

4. IF OVERRIDE DOES NOT WORK, NOTIFY MAINTENANCE."

**GENERAL NOTES FOR BUILDING A/C OVERRIDE ZONES:**

1. THESE DIAGRAMS INDICATE LIMITS OF EACH BUILDING OVERRIDE ZONE (BY AIR HANDLING UNIT) ONLY. THESE DIAGRAMS ARE ONLY INTENDED TO INDICATE WHICH OVERRIDE ZONE EACH ROOM, SPACE, OR AREA IS ON.

2. THESE DIAGRAMS MAY BE USED TO COMPILE THE OVERALL BUILDING VIEW/PLAN/TEMPLATE AT THE CAMPUS OVERRIDE PANEL; HOWEVER, ADDITIONAL SYMBOLS, DEVICES, AND ZONES ARE REQUIRED AS INDICATED ON THE CONTROL DRAWINGS AND SPECIFICATIONS.

3. SUBMIT PROPOSED, COLORED OVERRIDE ZONE GRAPHIC PLAN. GRAPHIC SHALL INCLUDE SCHOOL NAME, OPERATOR INSTRUCTIONS, SEPERATE COLORS FOR INDIVIDUAL ZONES, ETC.

4. SEE CONTROLS DRAWINGS AND SPECIFICATIONS FOR ADDITIONAL OVERRIDE ZONES (INCLUDING EXTERIOR LIGHTING) AND FOR OTHER ADDITIONAL REQUIREMENTS.

Override Graphics

DWG # 9.1.1

JOB # VWPW

NISD Village at West Pointe West ES

San Antonio, TX

Drawn:

ENG: Dennis Schnellman

| REV # | DESCRIPTION | DATE |
|---|---|---|
| 1 | Revision 1 | 8/14/2023 |
| 0 | SUBMITTED | 4/28/2023 |

Yates Co
4738 Whirlwind Dr.
San Antonio, TX 78217
Phone: 2107023820

NISD Village at West Pointe West ES
VWPW

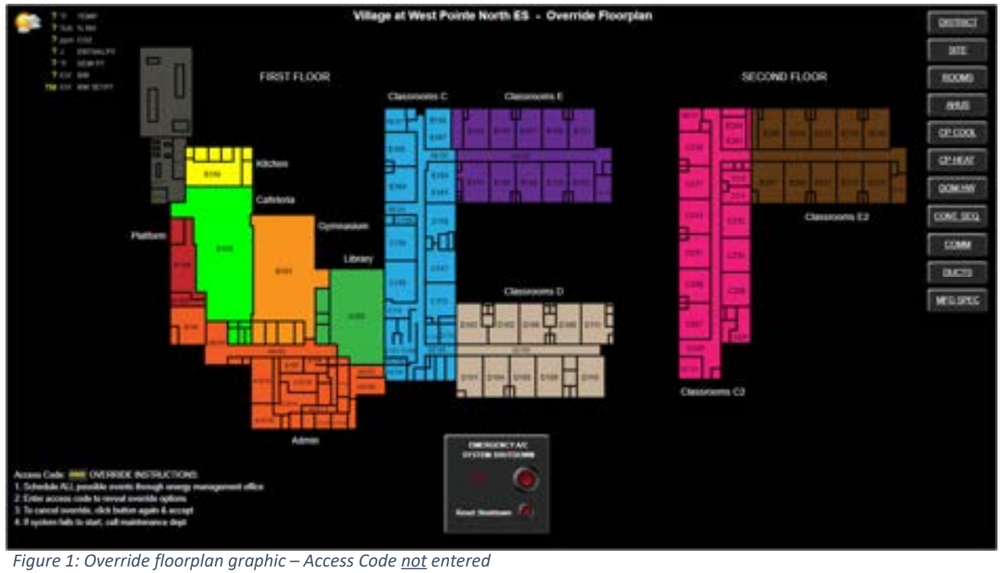


*Figure 1: Override floorplan graphic – Access Code not entered*

*Figure 2: Override floorplan graphic – Access Code entered*

*Figure 3: Override floorplan graphic – Access Code entered (Active)*

Override Graphics(Alternate)

DWG # 9.1.2

JOB # VWPW

NISD Village at West Pointe West ES

San Antonio, TX

| REV # | DESCRIPTION | DATE |
|---|---|---|
| 1 | Revision 1 | 8/14/2023 |
| 0 | SUBMITTED | 4/28/2023 |

Drawn:
ENG: Dennis Schnellman

Yates Co
4738 Whirlwind Dr.
San Antonio, TX 78217
Phone: 2107023820

NISD Village at West Pointe West ES
VWPW

*Typical of 2*

| Bill of Materials | | | | |
|---|---|---|---|---|
| **DID** | **Quantity** | **Part #** | **Manufacturer** | **Description** |
| OPN-UC | 2 | OPN-UC | Carrier | Prog. Controller (5 BO, 6 UI), 5 Equipment |
| XF50 | 2 | TR50VA015 | Functional Devices | Control Transformer (120/208/240/277/480 VAC Input - 24 VAC Output |
| PANEL-12x12 | 2 | AHE12X12X4 | Hoffman | Enclosure, Wall-mount, Hinged, Steel, NEMA1, 12"x12"x4" |
| OVRDPB | 2 | HW4LM110G24V | Idec | Unibody Pushbutton, Round, Green LED |

| Active Points List | | | |
|---|---|---|---|
| **Point Number** | **Point Type** | **Point Name** | **Setup** |
| IN-1 | DI | Override Status | DC |
| BO-1 | DO | Override Enable | Relay |

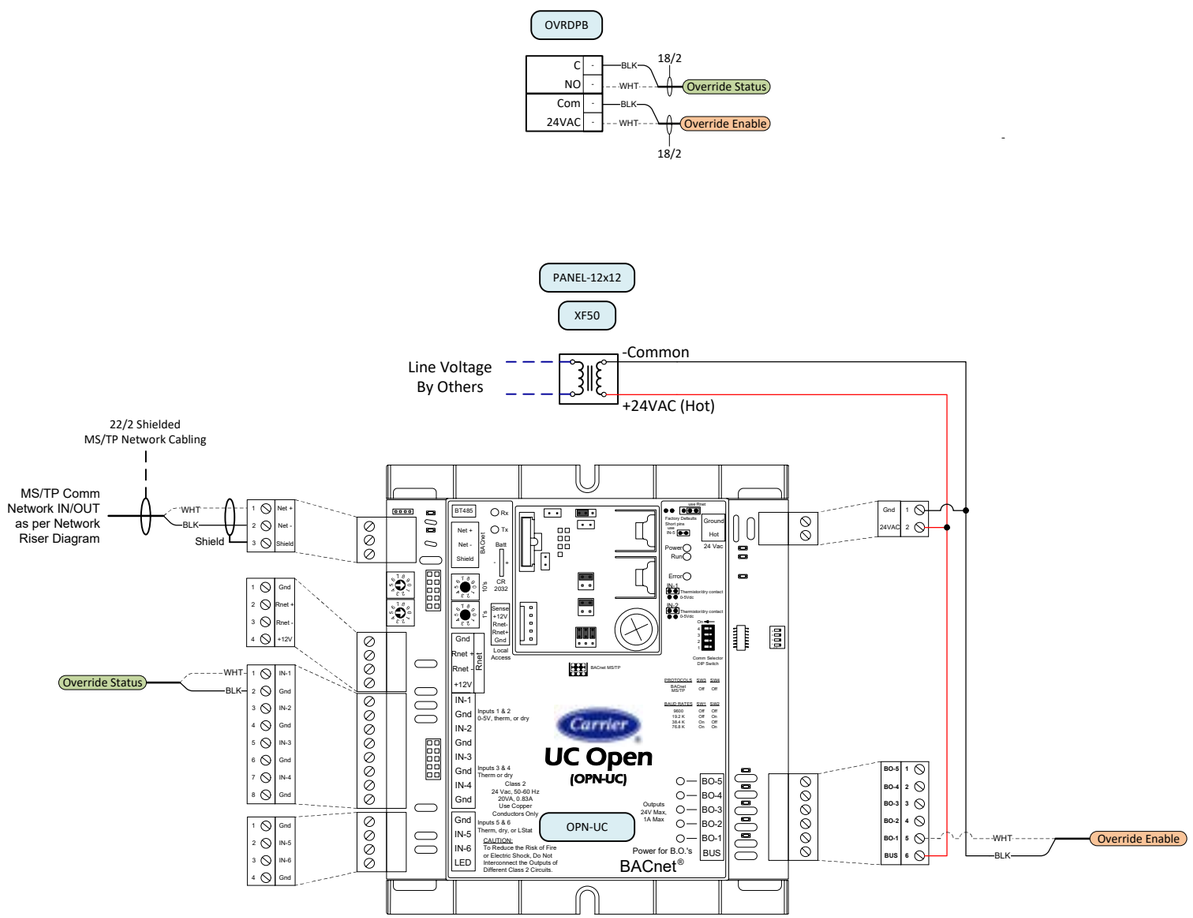


## HVAC Override Panels

**Run Conditions - Continuous:**

The pushbutton will initiate start commands to the applicable HVAC system components. Operation of an override button will energize the required equipment for a pre-determined time period (adj.) and the pilot light will indicate that the equipment requested is "operational." LED indicator will provide proven status of the equipment in operation. Once the override for a zone is activated and the associated pilot light is energized, pressing the pushbutton again will initiate the cancellation of the override function.

The kitchen override panel will be configured to start the heating plant, as required on a call for heating. The cooling will function normally only if the cooling is available, otherwise a cooling ventilation cycle will be initiated. The kitchen override panel will not be configured to initiate the central plant cooling on a call for cooling. All kitchen exhaust fans (except pantry) will be on the kitchen EMS zone in series with the local control as scheduled on the mechanical drawings.

General Notes:
1. Refer to Network Diagram and Cable Specification Chart for wiring details and control module address.
2. Coordinate with Electrical Contractor (Div. 26) to provide 120 VAC circuit power to control panels.
3. Refer to Carrier Technical Documentation for specifications on control module setup, wiring, and driver configuration

Override Panels
DWG # 9.1.3
JOB # VWPW
NISD Village at West Pointe West ES
San Antonio, TX
Drawn:
ENG: Dennis Schnellman
4/28/2023
SUBMITTED
DATE
DESCRIPTION
0
REV #

Yates Co
4738 Whirlwind Dr.
San Antonio, TX 78217
Phone: 2107023820

# NISD Village at West Pointe West ES
# VWPW

**GRAPHIC PACKAGE:**

A. GRAPHIC PACKAGE SHALL INCLUDE THE FOLLOWING:

B. LEVEL 1 GRAPHIC SHALL BE A LIMITED AERIAL VIEW OF THE CAMPUS WITH THE SCHOOL FRONT ENTRANCE (ADMIN AREA) AT THE BOTTOM OF THE GRAPHIC. THE GRAPHIC SHALL DISPLAY THE FOLLOWING:

a. BUILDING OR BUILDING SECTION IDENTIFIED TO MATCH ACTUAL BUILDING LETTER OR AREA, AND DISPLAYING TEMPERATURE COLOR. LABEL MAJOR FUNCTION AREAS SUCH AS AUDITORIUM, GYMS, CAFETERIA, ETC. & ROOM #'S AS SPACE ALLOWS.

1. PROVIDE FUNCTION TO "CLICK" ON THE BUILDING OR AREA TO GO TO THAT BUILDING OR AREA GRAPHIC. IF LEVEL 1 CANNOT DISPLAY ROOM NUMBERS.

b. BUTTONS FOR DIRECT ACCESS TO:

1. ALL ITEMS NOTED BELOW UNDER PARAGRAPH 'F', "GENERAL".

2. A FLOOR PLAN DISPLAYING THE COMM LOOP ROUTING, AND ALL MODULES (CARDS) ON THE LOOP, AND THEIR LOCATION (ROOM #).

3. SCHEDULING, FOR DIRECT ACCESS.

4. OVERRIDE PANEL DISPLAYING ANY OVERRIDE STATUS AND ALLOWING OPERATOR TO ACTIVATE OR CANCEL ANY OVERRIDE.

5. AN EXTERIOR LIGHTING SITE PLAN INDICATING ALL SITE LIGHTING LOCATIONS AND TYPE BY COLOR. SECURITY COLOR SHALL BE "A", EVENT COLOR SHALL BE "B", AND PARKING LOT COLOR SHALL BE "C".

1) EXTERIOR LIGHTS IN ZONES. ONE ZONE FOR SECURITY LIGHTING, ONE ZONE FOR EVENT LIGHTING, AND INDIVIDUAL ZONES FOR ROADWAY LIGHTING AND PARKING LOT LIGHTING. LOCATE ROADWAY AND PARKING LOT LIGHTING POLES ON GRAPHIC.

2) FOR SCHEDULING PURPOSES, APPLICABLE ROADWAY LIGHTING ZONES SHALL BE LINKED TO PARKING LOT LIGHTING ZONES.

3) EACH LIGHTING ZONE SHALL BE PROVIDED WITH AN ON/OFF SWITCH AND A DIRECT LINK TO SCHEDULING (OCCUPIED/UNOCCUPIED).

4) EACH ROADWAY AND PARKING LOT LIGHTING ZONE SHALL LIST THE LIGHTING CIRCUITS, AND INCLUDE THE LIGHTING CONTACTOR LOCATION (ROOM #) OR HAVE A DIRECT LINK TO A TEXT PAGE WITH THE SAME INFORMATION.

C. LEVEL 2 GRAPHIC (IF NEEDED) SHALL BE OF BUILDING OR BUILDING AREA FLOOR PLAN. GRAPHIC SHALL DISPLAY THE FOLLOWING:

a. ROOM NUMBERS.

b. ROOM TEMPERATURES BY COLOR.

c. LABEL MAJOR FUNCTION AREAS SUCH AS AUDITORIUM, GYMS, CAFETERIA, ETC. & ROOM #'S AS SPACE ALLOWS.

d. FUNCTION TO "CLICK" ON A ROOM NUMBER TO GO TO THAT ROOM.

e. ALL ITEMS NOTED BELOW UNDER PARAGRAPH 'F', "GENERAL".

D. LEVEL 3 GRAPHIC SHALL INDICATE ROOM A/C EQUIPMENT SERVING THAT ROOM. GRAPHIC SHALL DISPLAY THE FOLLOWING:

a. A TRUE GRAPHIC REPRESENTATION OF THE EQUIPMENT.

b. EQUIPMENT IDENTIFICATION AND LOCATION, IF LOCATED IN ANOTHER ROOM.

c. ALL EMS INPUTS, OUTPUTS, AND SETPOINTS DISPLAYED ON THE GRAPHIC WHERE THEY OCCUR. DAMPERS WITH AIR FLOW MONITORS SHALL DISPLAY ACTUAL CFM, SETPOINTS, AND PERCENT OPEN.

d. ROOM OUTPUTS, SETPOINTS, AND ADJUSTMENTS IN THE LOWER RIGHT CORNER OF THE GRAPHIC.

e. OUTSIDE AIR CONDITIONS IN THE UPPER LEFT CORNER OF THE GRAPHIC, IF APPLICABLE TO THE EQUIPMENT.

f. CALCULATED ITEMS, DISPLAYED WHERE APPLICABLE (i.e. OUTSIDE AIR AND RETURN AIR ENTHALPY).

g. A LIST OF ALL ROOMS SERVED BY THE EQUIPMENT, IF APPLICABLE, OR A DIRECT LINK TO A TEXT PAGE LISTING THE ROOMS.

h. ALL ITEMS NOTED BELOW UNDER PARAGRAPH 'F', "GENERAL".

i. A FUNCTION TO "CLICK" ON HEATING OR COOLING SOURCE TO GO TO THAT SOURCE.

E. LEVEL 4 GRAPHIC SHALL BE THE SAME AS LEVEL 3, BUT SHALL CONTINUE STEPPING DOWN THROUGH EQUIPMENT LEVELS TO THE COOLING AND HEATING SOURCE.

F. GENERAL:

a. EVERY LEVEL GRAPHIC SHALL DISPLAY IN THE UPPER LEFT CORNER:

1. OA TEMPERATURE.

2. OA HUMIDITY.

3. OA CO2 LEVEL.

4. OA ENTHALPY.

5. OA DEW POINT.

6. SITE ELECTRICAL DEMAND LIMIT SETPOINT.

7. SITE CURRENT ELECTRICAL DEMAND.

b. EVERY LEVEL GRAPHIC SHALL BE PROVIDED WITH A PICKABLE (BUTTON) IN THE UPPER RIGHT CORNER FOR DIRECT ACCESS TO:

1. DISTRICT LEVEL.

2. CAMPUS LEVEL 1.

3. PREVIOUS LEVEL.

4. ROOM LISTING. A TEXT PAGE LISTING ALL ROOM NUMBERS IN ALPHA/NUMERICAL ORDER FOR DIRECT ACCESS TO THE EQUIPMENT GRAPHIC SOURCE SERVING THAT ROOM.

5. AHU LISTING. A TEXT PAGE (CHART) LISTING ALL AHU'S, RTU'S, AREAS SERVED (i.e. CLASSROOMS, CAFETERIA, GYM, ETC), ON/OFF STATUS, SPACE OR SUPPLY AIR TEMPERATURE, AND SET POINT.

6. CENTRAL PLANT COOLING.

7. CENTRAL PLANT HEATING.

8. DOMESTIC HOT WATER.

9. MANUFACTURER'S SPECIFIC DATA SUCH AS "MORE" FOR OPEN TECH.

10. OPERATOR'S MESSAGE BOX.

c. EVERY APPLICABLE LEVEL GRAPHIC SHALL BE PROVIDED WITH A PICKABLE (BUTTON) IN THE UPPER RIGHT FOR DIRECT ACCESS TO:

1. CONTROL SEQUENCE TEXT PAGE FOR DISPLAYED EQUIPMENT INDICATIN APPLICABLE SEQUENCE WITH THE PROPER SETPOINTS.

2. DUCT LAYOUTS.

3. COMMUNICATION LOOP.

d. PROVIDE TRENDS ON THE FOLLOWING: ALL TEMPERATURES, ALL HUMIDITIES, ALL DEW POINTS, ALL CO2 VALUES, ALL VALVE POSITIONS, ALL DAMPER POSITIONS, ALL EQUIPMENT START/STOP AND STATUS, ALL VSD % SPEEDS, ALL STATIC PRESSURES, ALL SYSTEM AIR FLOW RATES (CFM), ALL DEHUMIDIFECATION STATUS, ALL FAULTS, PULSE METER DEMANDS, AND ALL LIGHTING STATUS.

e. LABEL ALL INPUTS AND OUTPUTS ON THE DEVICE PROPERTIES (FOR ALLERTON) OR ON THE PARAMETERS (FOR AUTOMATED LOGIC).

f. ANY MINOR EQUIPMENT (EXHAUST FANS, RELIEF DAMPERS, ETC.) LINKED TO AN EQUIPMENT GRAPHIC SHALL BE GRAPHICALLY DISPLAYED WITH THE EQUIPMENT IDENTIFICATION AND LOCATION NOTED.

g. FOR SCHEDULING PURPOSES, GROUP ALL STAND-ALONE EQUIPMENT (TOILET ROOM EXHAUST FANS , RELIEF DAMPERS, ETC.) WITH THE SOURCE EQUIPMENT.

h. MONITORED-ONLY AREAS AND EQUIPMENT (IDF'S, MDF'S, ETC.) SHALL BE DISPLAYED ON THE GRAPHICS THE SAME AS FOR ANY OTHER AREA, BUT THE EQUIPMENT SHALL BE NOTED AS "MONITORED ONLY".

i. A SCHEDULE PAGE BY AHU, SUB-LISTING ALL ROOMS SERVED BY THAT AHU, AND A REVERSE-LISTING BY ROOM NUMBER REFERENCING THE AHU SERVING THE ROOM, ALL LISTED SHALL HAVE A BUTTON FOR DIRECT ACCESS TO THE AHU OR ROOM.

j. SPACE TEMPERATURE SETPOINTS SHALL BE SET AS FOLLOWS: COOLING: 76F; HEATING: 68F.

Graphics Package

DWG # 9.1.4

JOB # VWPW

NISD Village at West Pointe West ES

San Antonio, TX

| REV # | DESCRIPTION | DATE |
|---|---|---|
| 1 | Revision 1 | 8/14/2023 |
| 0 | SUBMITTED | 4/28/2023 |

Drawn:
ENG: Dennis Schnellman

Yates Co
4738 Whirlwind Dr.
San Antonio, TX 78217
Phone: 2107023820

CPS DEMAND RESPONSE:

CPS'S DEMAND RESPONSE PROGRAM ASKS CUSTOMERS TO PARTICIPATE IN CURTAILING ENERGY USAGE THROUGHOUT THE ELEVATED HEATED DAYS OF SUMMER TO PREVENT ROLLING BROWNOUTS. THE PARTICIPATED CURTAILMENT THROUGHOUT THE CITY CAN REDUCE ENERGY USAGE WHEN DEMAND IS NEAR OR ABOVE THE UTILITY'S MAXIMUM PRODUCTION CAPACITY:

1. DEMAND RESPONSE SEQUENCE (ALL CAMPUSES):
   - A) THE DR PROGRAM SHALL BE ENABLED BY AUTHORIZED NISD EMPLOYEES PER DISTRICT GUIDELINES.
   - B) THE DR PROGRAM SHALL UTILIZE THE EXISTING ELECTRIC METER DEMAND CONTROL PROGRAM WHERE APPLICABLE.
   - C) THE DR PROGRAM SHALL RESET SPACE TEMPERATURES FOR SINGLE DUCT VAV TERMINALS, FAN POWERED VAV TERMINALS, SINGLE ZONE AIR HANDLING UNITS, AND SINGLE ZONE PACKAGED UNITS.
   - D) IF A CAMPUS IS IN A SCHEDULED UNOCCUPIED CONDITION, THEN THE DR PROGRAM SHALL NOT APPLY TO THAT CAMPUS.
   - E) UPON RELEASE OF THE DR PROGRAM "REDUCE CURTAILMENT" FROM LEVEL 3 TO LEVEL 2, FROM LEVEL 2 TO LEVEL 1, OR FROM LEVEL 1 TO LEVEL 0. EACH TRANSITION SHALL OCCUR OVER A THIRTY (30) MINUTE PERIOD.
   - F) NATIVE CAMPUSES SHALL BE INCLUDED IN THIS PROGRAM. EXISTING PROGRAMS SHALL BE USED WHERE AVAILABLE. A NEW ELECTRIC METER PROGRAM AND GRAPHIC PAGE MAY BE REQUIRED IF NOT PRESENTLY INSTALLED.

2. ADDITIONAL DASHBOARD REQUIREMENTS (ALERTON OR YATES CAMPUSES). PROVIDE THE FOLLOWING GRAPHIC PAGES FOR MANUAL DEMAND RESPONSE (DR). OVERALL DISTRICT DR PAGE WITH:
   - A) CURRENT DEMAND LEVEL.
   - B) DISTRICT-WIDE OPT IN BUTTON (YES OR NO) WITH DROP-DOWN MENU.
   - C) INDIVIDUAL DEMAND OVERRIDE ENABLE.
   - D) INDIVIDUAL DEMAND OVERRIDE VALUE.
   - E) INDIVIDUAL DEMAND OVERRIDE TIME.
   - F) INDIVIDUAL OVERRIDE TIME REMAINING.
   - G) INDIVIDUAL DEMAND OVERRIDE RESET.

3. ADDITIONAL CAMPUS GRAPHICS GROUP PAGE FEATURES (ALERTON OR YATES CAMPUSES):
   - A) CAMPUS PARTICIPATION IN THE DR REQUEST (YES OR NO) WITH DROP-DOWN MENU.
   - B) LEVEL OF EACH CAMPUS PARTICIPATION (1, 2, 3) WITH DROP-DOWN MENU.
   - C) OCCUPIED SPACE TEMPERATURE SETPOINTS SHALL BE ADJUSTED BY THE DR LEVEL AS FOLLOWS:
     1. LEVEL 1: COOLING SETPOINT 2 F DEGREES HIGHER AND HEATING SETPOINT 2 F DEGREES LOWER.
     2. LEVEL 2: COOLING SETPOINT 3 F DEGREES HIGHER AND HEATING SETPOINT 3 F DEGREES LOWER.
     3. LEVEL 3: COOLING SETPOINT 4 F DEGREES HIGHER AND HEATING SETPOINT 4 F DEGREES LOWER.
   - D) DURING THE DR PERIOD, THE LOCAL SETPOINT ADJUSTMENT SLIDE BAR WILL CONTINUE TO ALLOW THE OCCUPANT TO ADJUST THE SETPOINTS AT THE SPACE TEMPERATURE SENSOR PER NISD STANDARD SETPOINTS.

CPS Demand Response

DWG # 9.1.5

JOB # VWPW

NISD Village at West Pointe West ES

San Antonio, TX

| REV # | DESCRIPTION | DATE |
|---|---|---|
| 1 | Revision 1 | 8/14/2023 |
| 0 | SUBMITTED | 4/28/2023 |

Drawn:
ENG: Dennis Schnellman

Yates Co
4738 Whirlwind Dr.
San Antonio, TX 78217
Phone: 2107023820